Website

Ningbo Longwell Electric Technology Co.,Ltd

TEL:+86 (574) 6218 9863 Skype : Brucehappy1
Fax:+86 18358274663 Whatsapp:+0086 18358274663
E-mail:sales@zjlongwell.com
Web:https://www.longwellfans.com/
Address:#NO.100 ,South of Xuxiang River ,Ditang District, Yuyao,Ningbo Zhejiang Province,China 315400

LONGWELL
Turn to Experts - HVAC

Professional HVAC Fan & Motors Manufacturer

EC Plug Fan

Ningbo Longwell Electric Technology CO, LTD

Ningbo Longwell Electric Technology CO, LTD
https://www.longwellfans.com Email:sales@zjlongwell.com

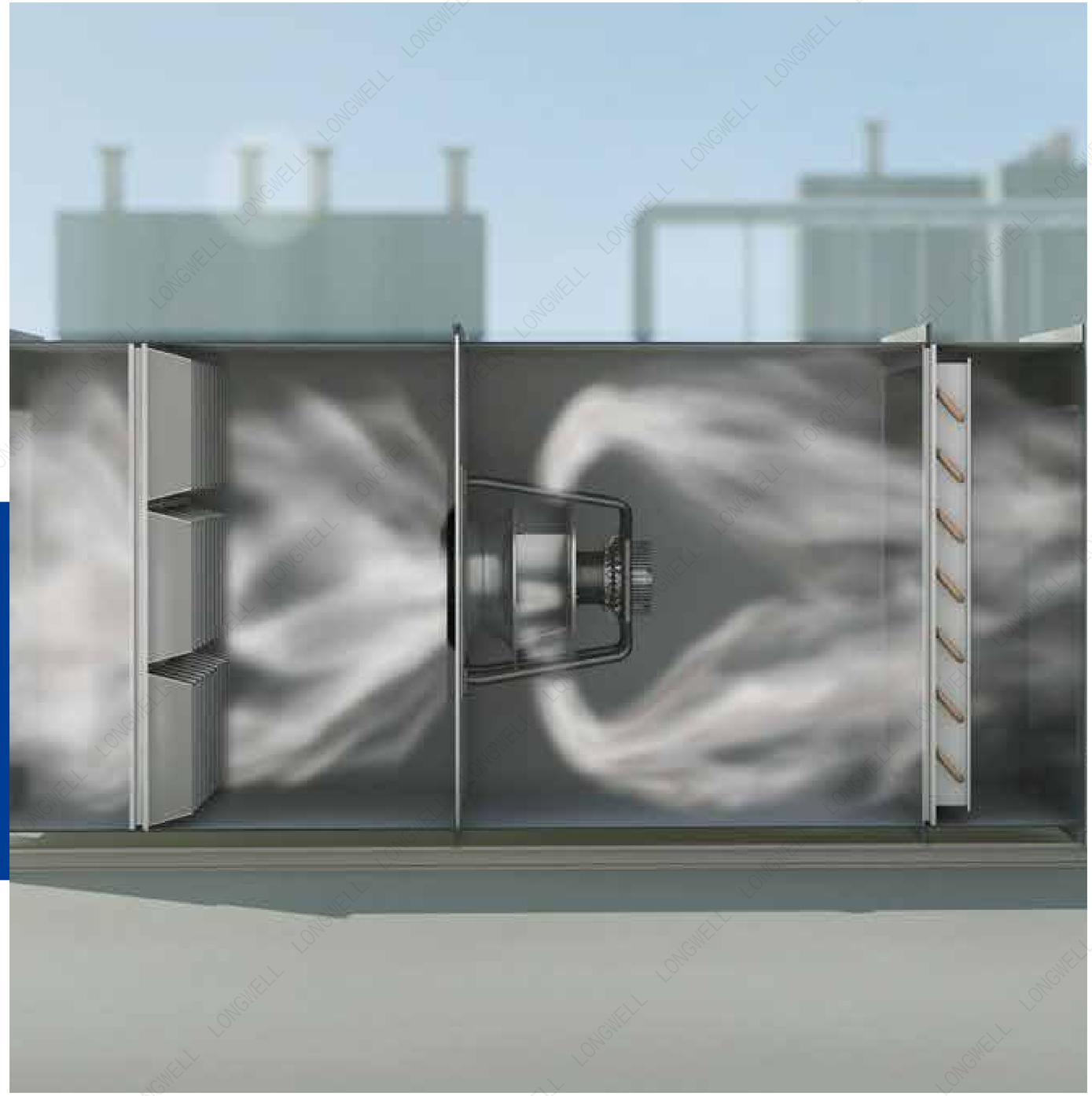

CATALOGUE

01 Type Code

02-54 EC Fan with Bracket(Φ133-Φ250)

55-108 EC Fan with Bracket(Φ280-Φ400)

109-144 EC Fan with Bracket(Φ450-Φ630)

Type Code

LW B E 3G 133 - 072 P S - 01

- Series number
- T-400V S-230V U-115V
- P-with bracket
  N-without bracket
- Motor size:072/092/102/138/188/218
- Diameter of rotor
- 3 phase
- A-AC D-DC E-EC
- B-Backward F-Forward
- Longwell

Ningbo Longwell Electric Technology CO, LTD
https://www.longwellfans.com Email:sales@zjlongwell.com

EC Fan with Bracket

Professional HVAC Fan &Motors Manufacturer

Ningbo Longwell Electric Technology CO, LTD
https://www.longwellfans.com Email:sales@zjlongwell.com

LWBE-133 Series

Product Characteristic

- Impeller Material: PA6+GF
- Supply Voltage: 230V,50/60Hz
- Mode Of Operation: S1
- Protection Class: IP55
- Insulation Class: F
- Operation Temperature: -25℃～+60℃
- Techniacal Feature: Control input 0-10VDC/PWM,Tech output,Locked-Rotor protection,Reverse Polarity Over-voltage protection, Soft Start Protection.

Technical Specifications

Model	Voltage (V)	Input Power (W)	Current (A)	Air Volume (m^3/h)	Static Pressure (Pa)	Speed (RPM)	Noise [dB(A)]
LWBE3G133-072PS-02	230	30	0.23	268	453	3800	63

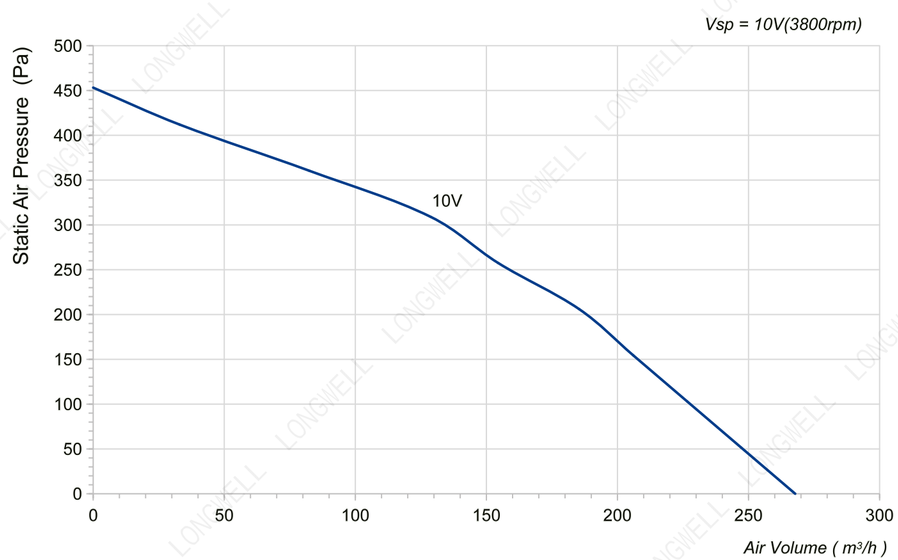

LWBE3G133-072NS-07 (without bracket)

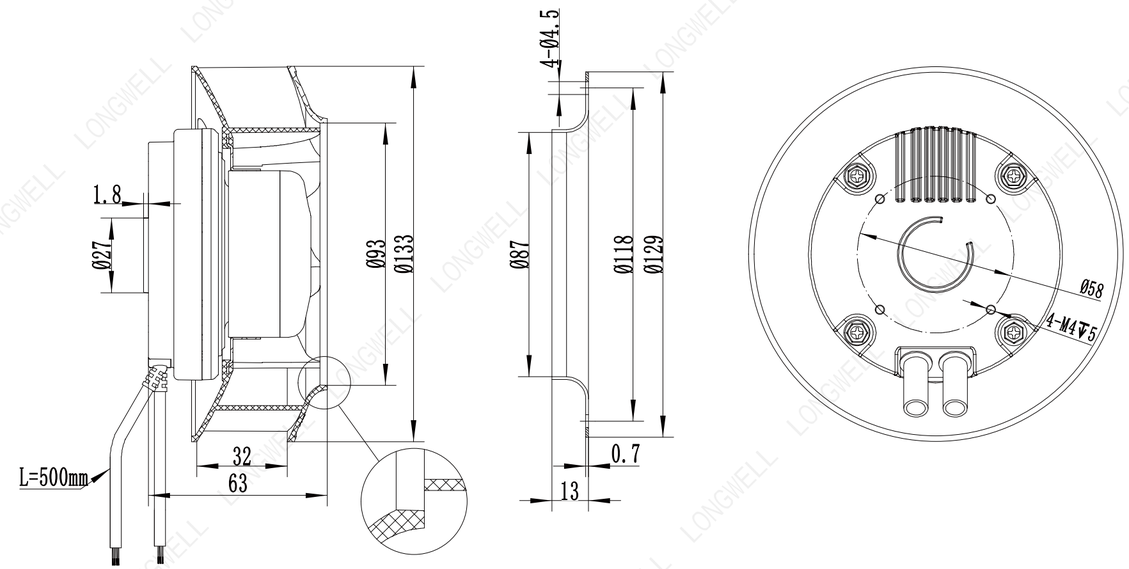

LWBE3G133-072PS-02 (with bracket)

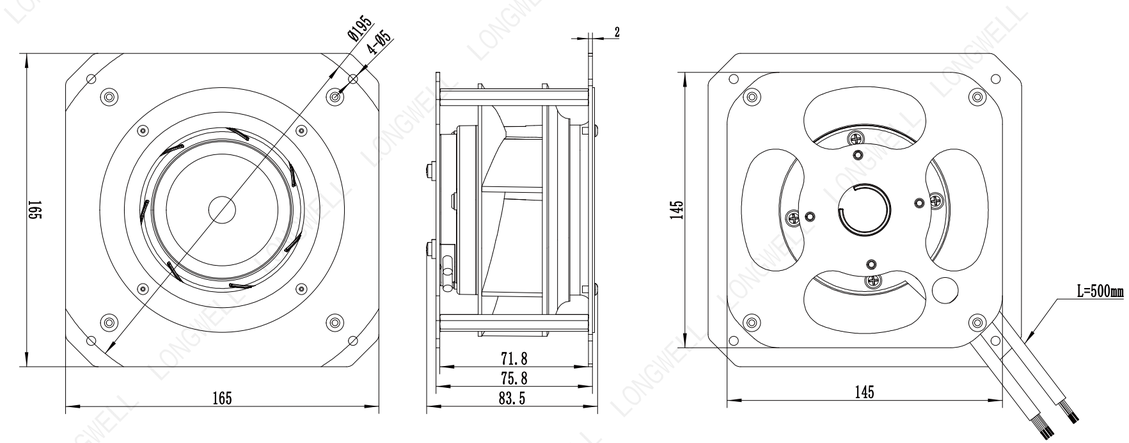

Ningbo Longwell Electric Technology CO, LTD
https://www.longwellfans.com Email:sales@zjlongwell.com

LWBE-133 Series

Product Characteristic

- Impeller Material: PA6+GF
- Supply Voltage: 230V,50/60Hz
- Mode Of Operation: S1
- Protection Class: IP55
- Insulation Class: F
- Operation Temperature: -25℃～+60℃
- Techniacal Feature: Control input 0-10VDC/PWM,Tech output,Locked-Rotor protection,Reverse Polarity Over-voltage protection, Soft Start Protection.

Technical Specifications

Model	Voltage (V)	Input Power (W)	Current (A)	Air Volume (m³/h)	Static Pressure (Pa)	Speed (RPM)	Noise [dB(A)]
LWBE3G133-072PS-03	230	53	0.38	433	433	4400	70

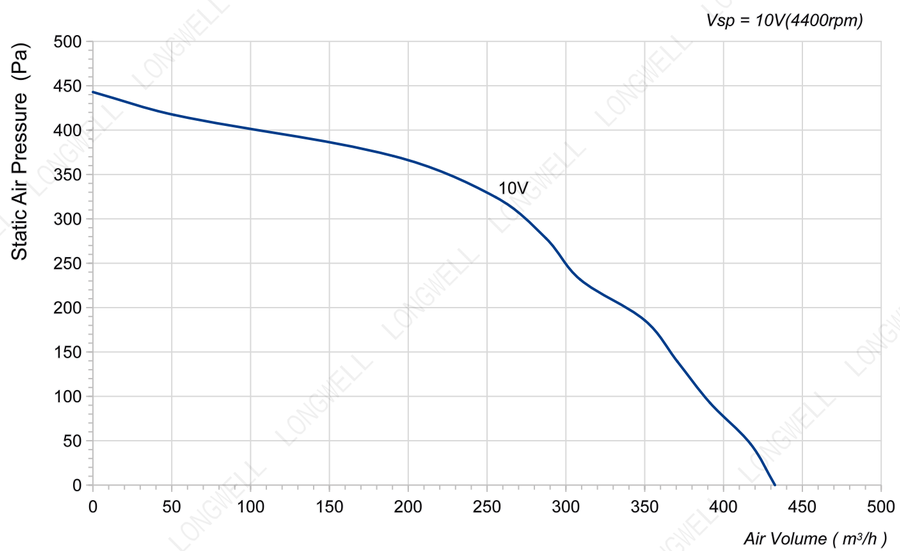

LWBE3G133-072NS-08 (without bracket)

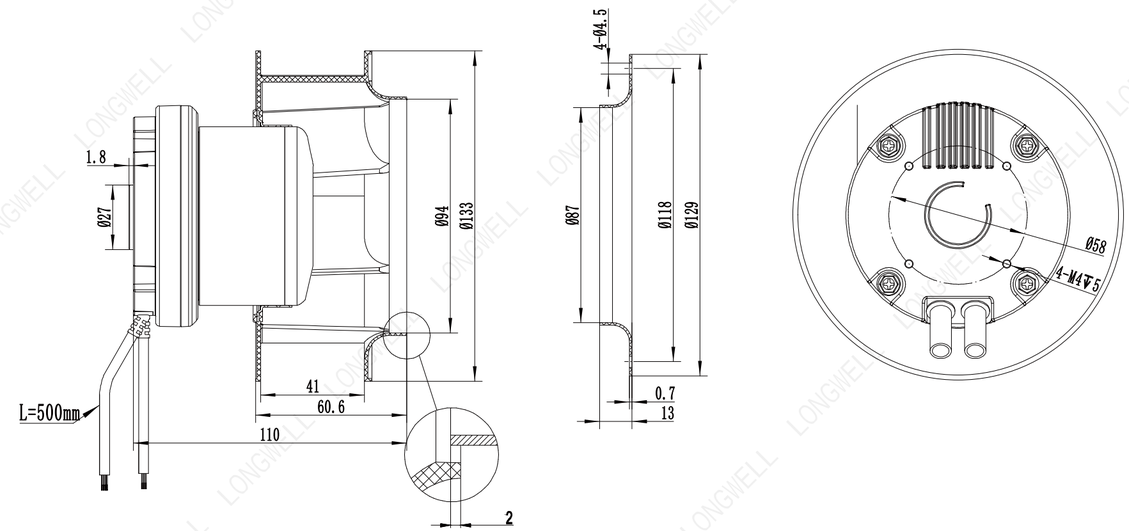

LWBE3G133-072PS-03 (with bracket)

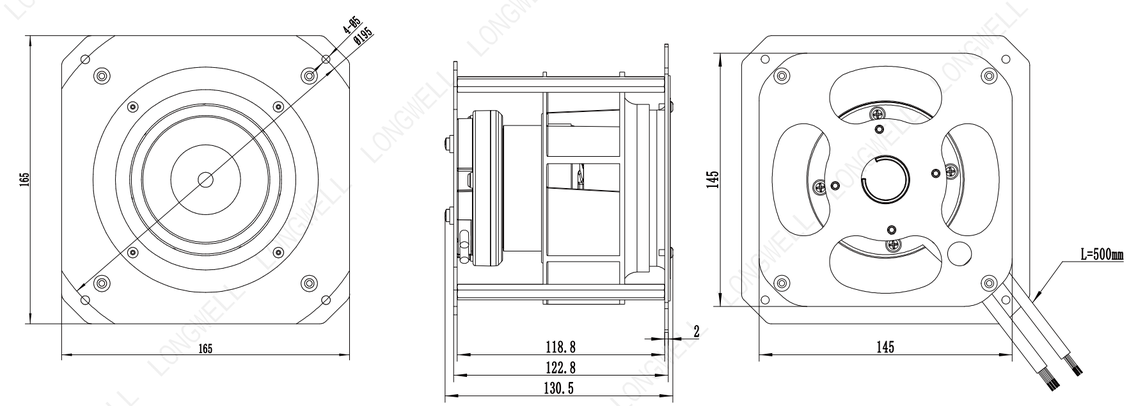

Ningbo Longwell Electric Technology CO, LTD
https://www.longwellfans.com Email:sales@zjlongwell.com

LWBE-175 Series

Product Characteristic

- Impeller Material: PA6+GF
- Supply Voltage: 230V,50/60Hz
- Mode Of Operation: S1
- Protection Class: IP55
- Insulation Class: F
- Operation Temperature: -25℃～+60℃
- Techniacal Feature: Control input 0-10VDC/PWM,Tech output,Locked-Rotor protection,Reverse Polarity Over-voltage protection, Soft Start Protection.

Technical Specifications

Model	Voltage (V)	Input Power (W)	Current (A)	Air Volume (m³/h)	Static Pressure (Pa)	Speed (RPM)	Noise [dB(A)]
LWBE3G175-072PS-01	230	55	0.4	536	453	2800	65

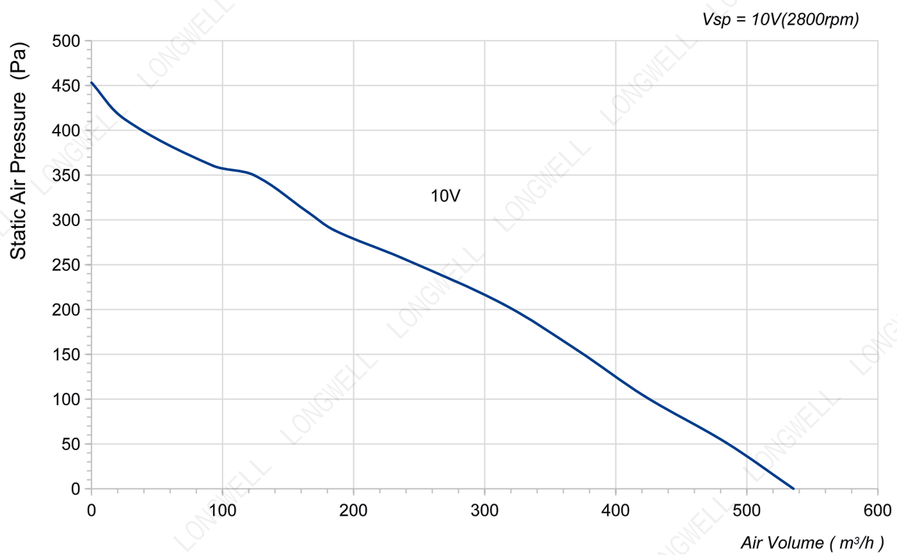

LWBE3G175-072NS-06 (without bracket)

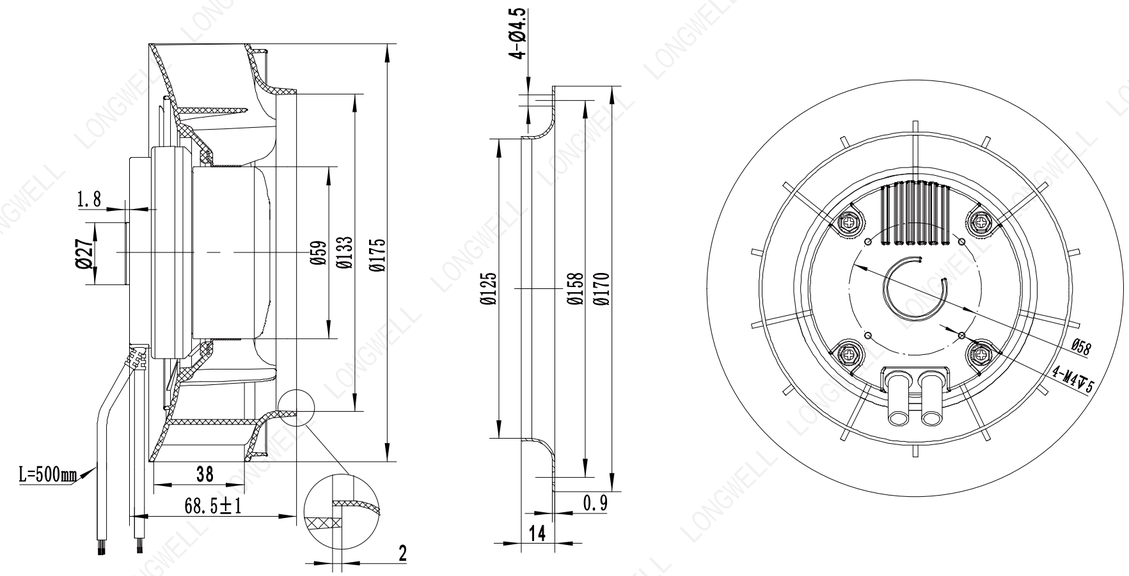

LWBE3G175-072PS-01 (with bracket)

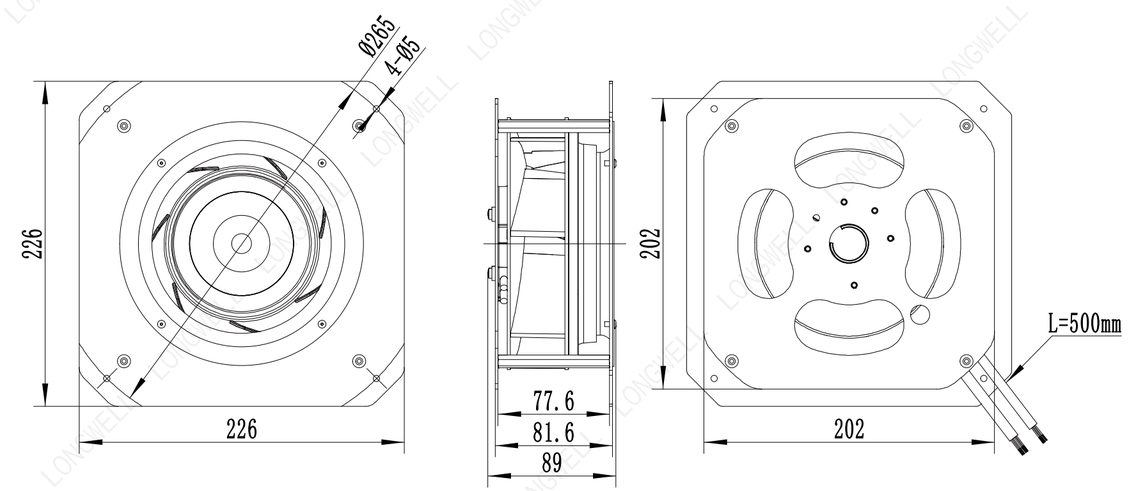

Ningbo Longwell Electric Technology CO, LTD
https://www.longwellfans.com Email:sales@zjlongwell.com

LWBE-175 Series

Product Characteristic

- Impeller Material: PA6+GF
- Supply Voltage: 230V,50/60Hz
- Mode Of Operation: S1
- Protection Class: IP55
- Insulation Class: F
- Operation Temperature: -25℃～+60℃
- Techniacal Feature: Control input 0-10VDC/PWM,Tech output,Locked-Rotor protection,Reverse Polarity Over-voltage protection, Soft Start Protection.

Technical Specifications

Model	Voltage (V)	Input Power (W)	Current (A)	Air Volume (m³/h)	Static Pressure (Pa)	Speed (RPM)	Noise [dB(A)]
LWBE3G175-072PS-02	230	85	0.65	742	536	3300	72

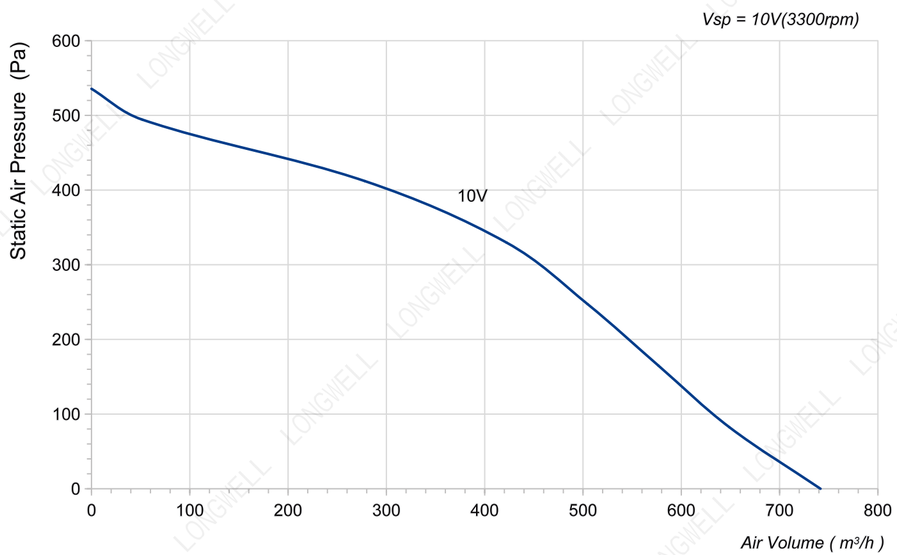

LWBE3G175-072NS-03 (without bracket)

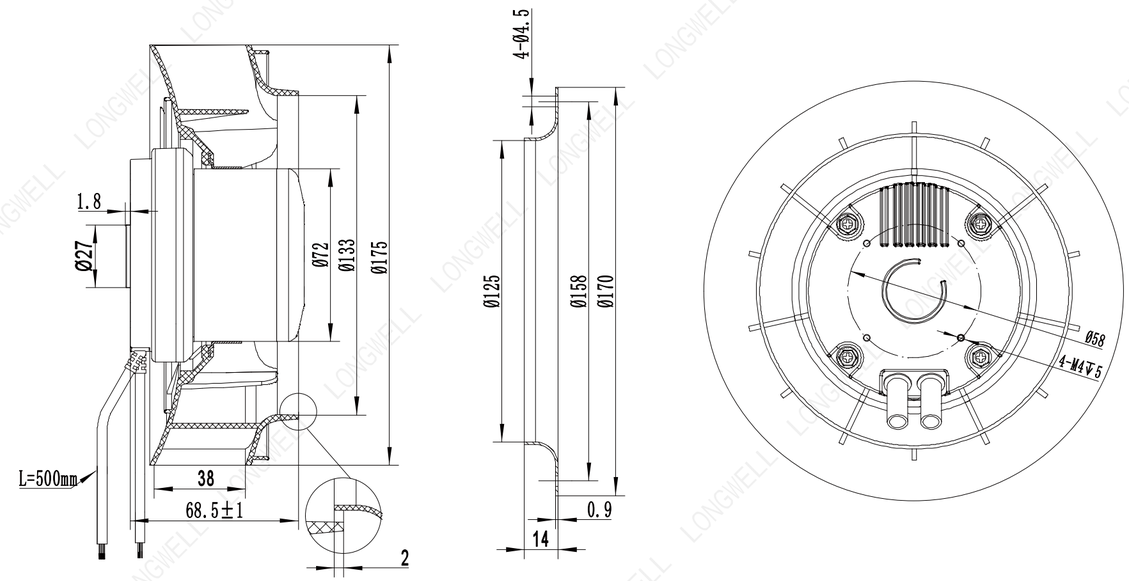

LWBE3G175-072PS-02 (with bracket)

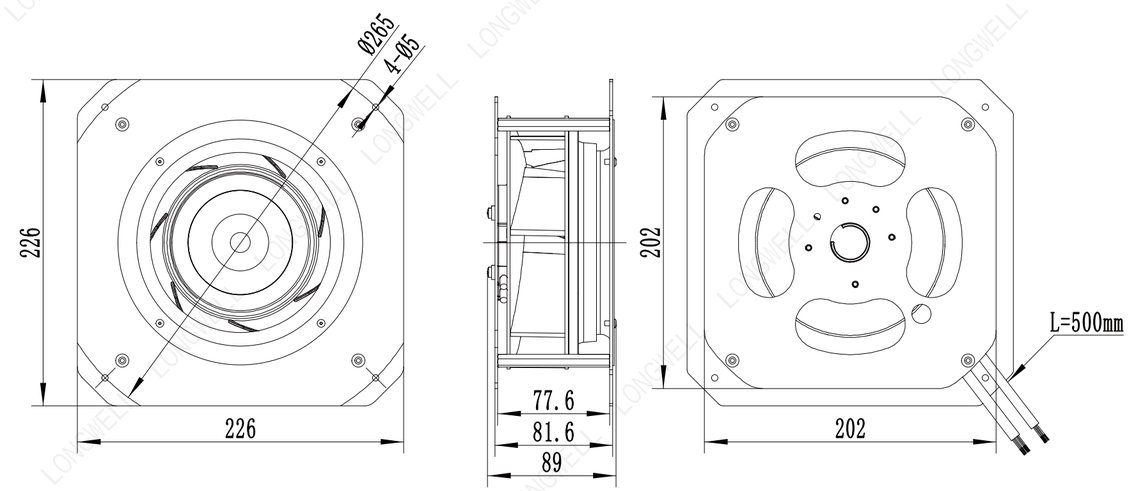

Ningbo Longwell Electric Technology CO, LTD
https://www.longwellfans.com Email:sales@zjlongwell.com

LWBE-175 Series

Product Characteristic

- Impeller Material: PA6+GF
- Supply Voltage: 230V,50/60Hz
- Mode Of Operation: S1
- Protection Class: IP55
- Insulation Class: F
- Operation Temperature: -25℃～+60℃
- Techniacal Feature: Control input 0-10VDC/PWM,Tech output,Locked-Rotor protection,Reverse Polarity Over-voltage protection, Soft Start Protection.

Technical Specifications

Model	Voltage (V)	Input Power (W)	Current (A)	Air Volume (m³/h)	Static Pressure (Pa)	Speed (RPM)	Noise [dB(A)]
LWBE3G175-072PS-03	230	115	0.9	700	803	4400	74

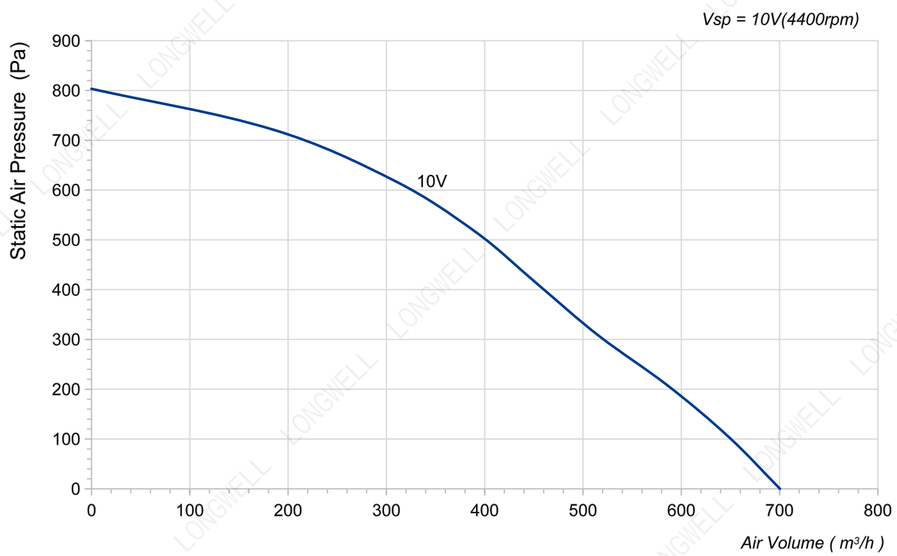

LWBE3G175-072NS-08 (without bracket)

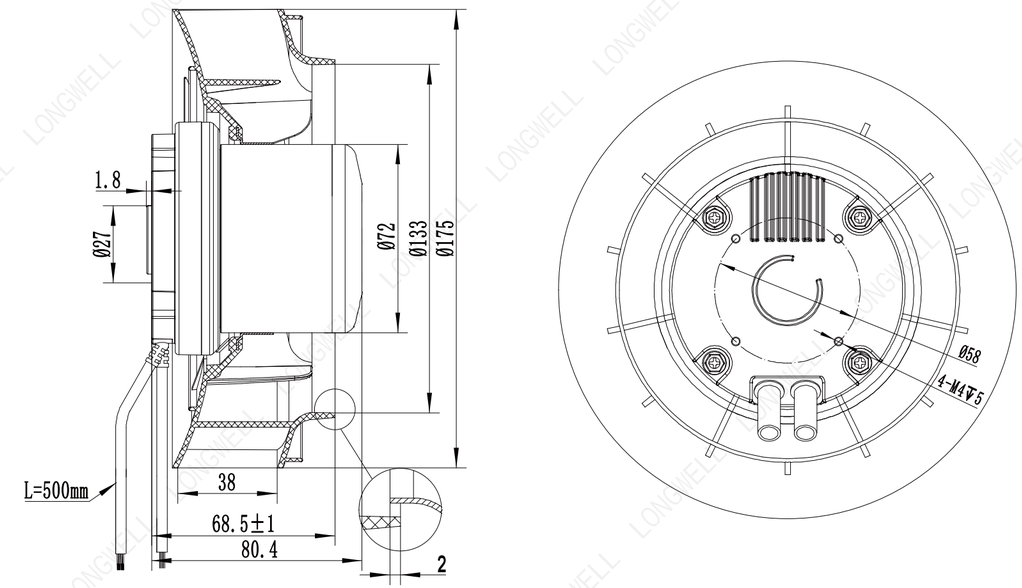

LWBE3G175-072PS-03 (with bracket)

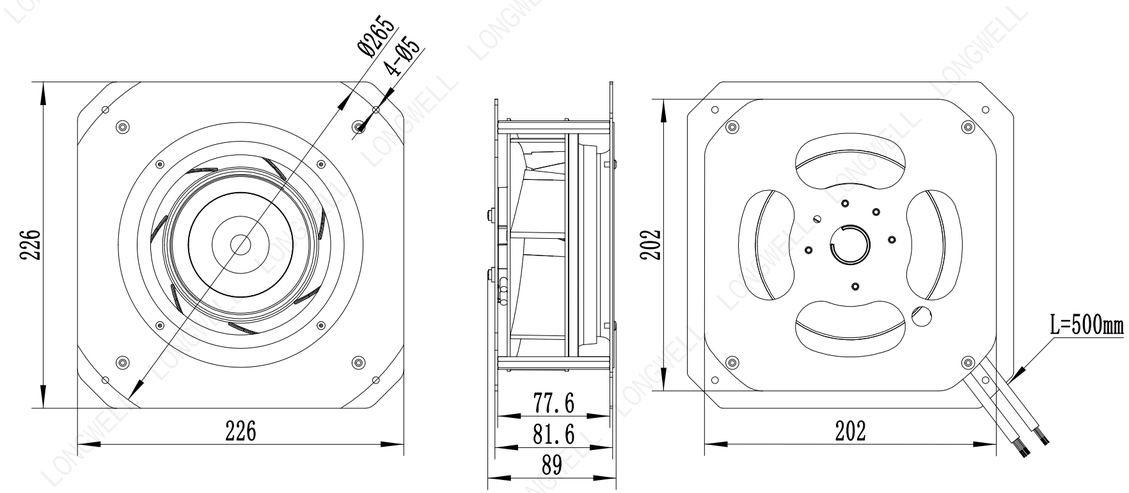

Ningbo Longwell Electric Technology CO, LTD
https://www.longwellfans.com Email:sales@zjlongwell.com

LWBE-175 Series

Product Characteristic

- Impeller Material: PA6+GF
- Supply Voltage: 230V,50/60Hz
- Mode Of Operation: S1
- Protection Class: IP55
- Insulation Class: F
- Operation Temperature: -25℃～+60℃
- Techniacal Feature: Control input 0-10VDC/PWM,Tech output,Locked-Rotor protection,Reverse Polarity Over-voltage protection, Soft Start Protection.

Technical Specifications

Model	Voltage (V)	Input Power (W)	Current (A)	Air Volume (m^3/h)	Static Pressure (Pa)	Speed (RPM)	Noise [dB(A)]
LWBE3G175-072PS-05	230	155	1.09	700	876	4800	75

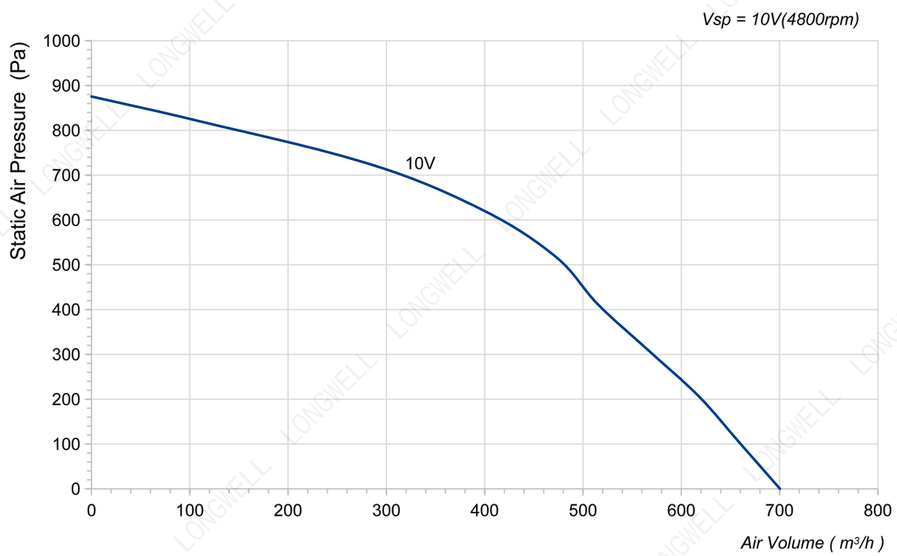

LWBE3G175-072NS-09 (without bracket)

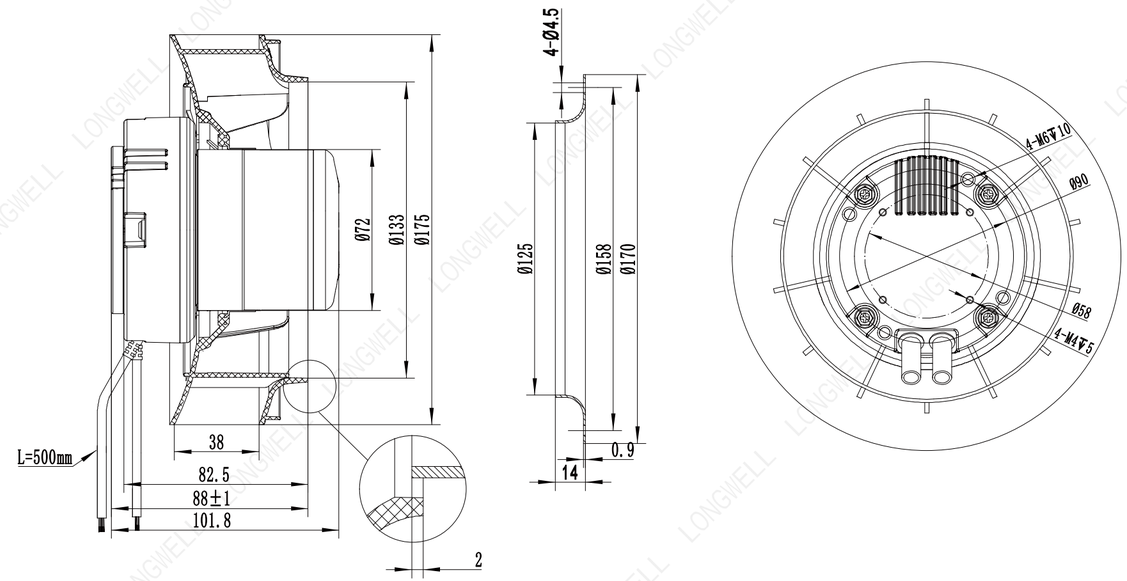

LWBE3G175-072PS-05 (with bracket)

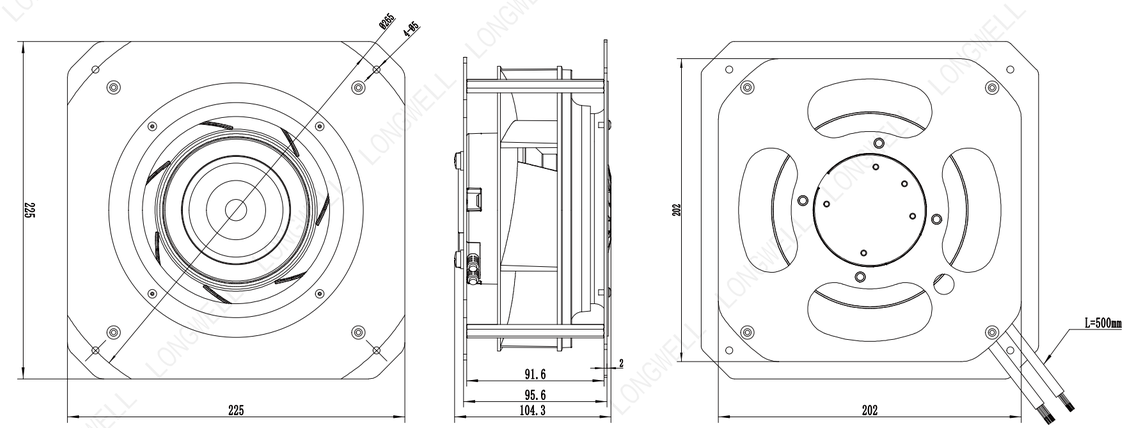

Ningbo Longwell Electric Technology CO, LTD
https://www.longwellfans.com Email:sales@zjlongwell.com

LWBE-175 Series

Product Characteristic

- Impeller Material: PA6+GF
- Supply Voltage: 230V,50/60Hz
- Mode Of Operation: S1
- Protection Class: IP55
- Insulation Class: F
- Operation Temperature: -25℃～+60℃
- Techniacal Feature: Control input 0-10VDC/PWM,Tech output,Locked-Rotor protection,Reverse Polarity Over-voltage protection, Soft Start Protection.

Technical Specifications

Model	Voltage (V)	Input Power (W)	Current (A)	Air Volume (m³/h)	Static Pressure (Pa)	Speed (RPM)	Noise [dB(A)]
LWBE3G175-072PS-04	230	170	1.2	912	876	4760	71

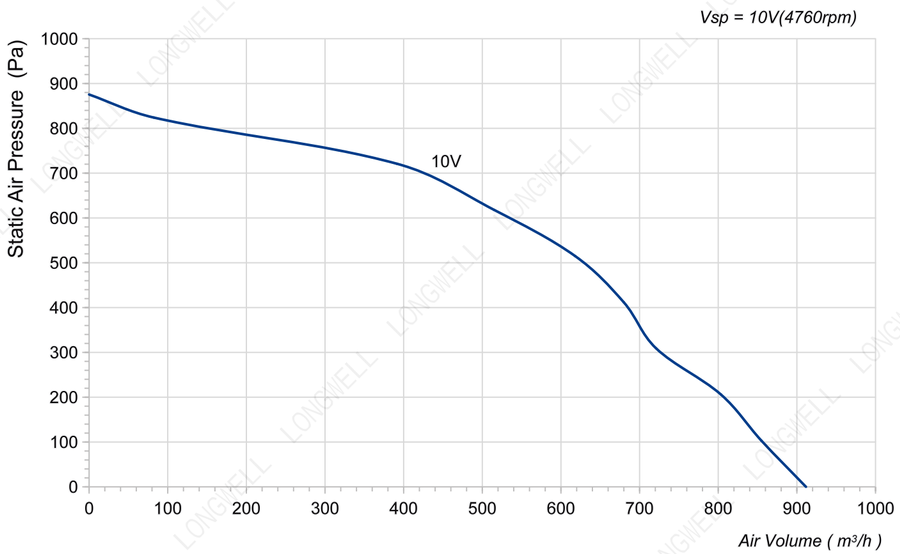

LWBE3G175-072NS-07 (without bracket)

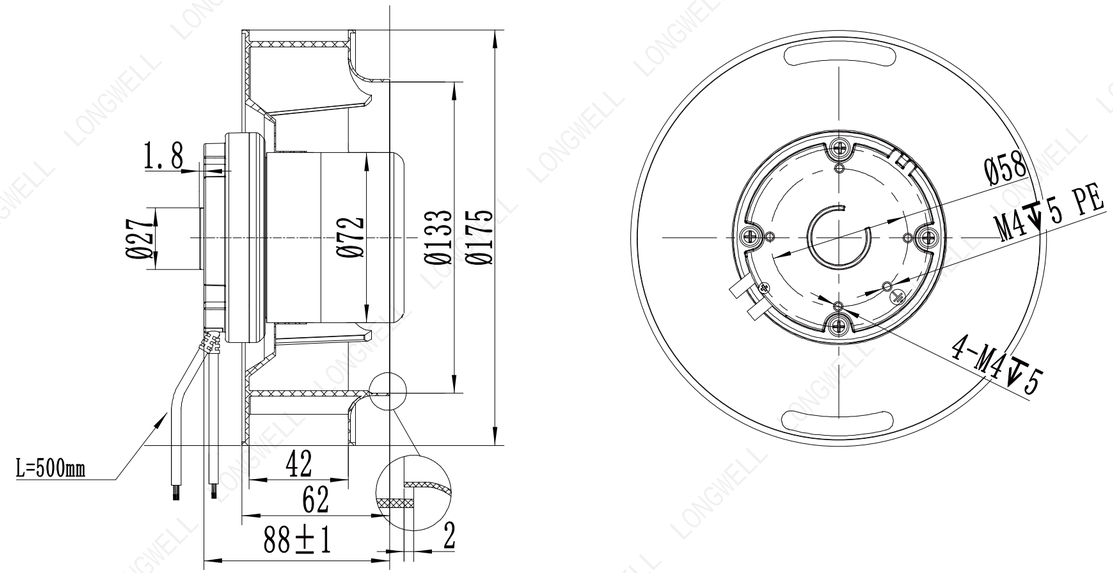

LWBE3G175-072PS-04 (with bracket)

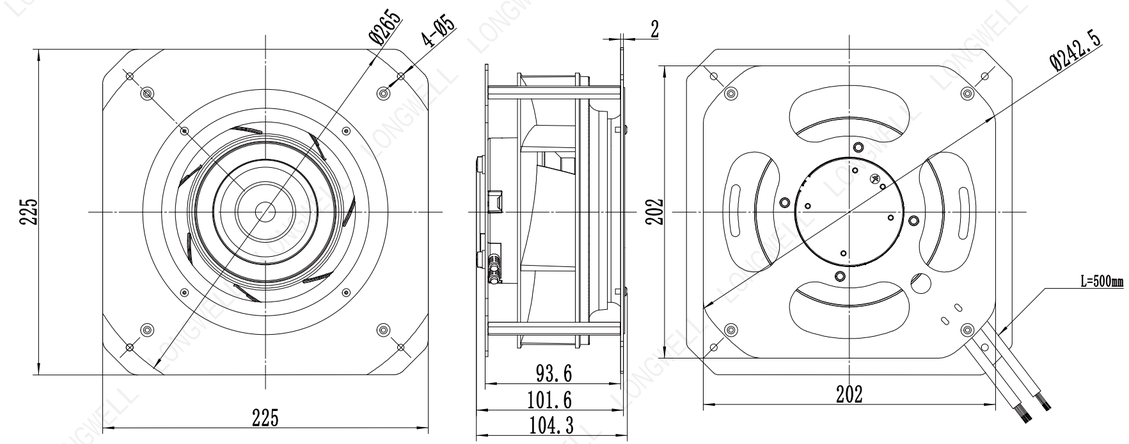

Ningbo Longwell Electric Technology CO, LTD
https://www.longwellfans.com Email:sales@zjlongwell.com

LWBE-190 Series

Product Characteristic

- Impeller Material: PA6+GF
- Supply Voltage: 230V,50/60Hz
- Mode Of Operation: S1
- Protection Class: IP55
- Insulation Class: F
- Operation Temperature: -25℃～+60℃
- Techniacal Feature: Control input 0-10VDC/PWM,Tech output,Locked-Rotor protection,Reverse Polarity Over-voltage protection, Soft Start Protection.

Technical Specifications

Model	Voltage (V)	Input Power (W)	Current (A)	Air Volume (m³/h)	Static Pressure (Pa)	Speed (RPM)	Noise [dB(A)]
LWBE3G190-072PS-06	230	64	0.53	639	453	2940	65

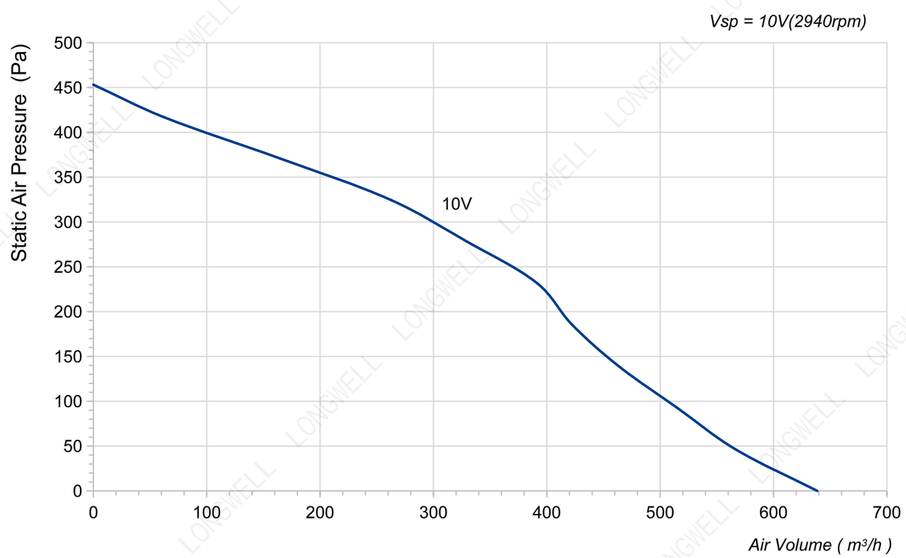

LWBE3G190-072NS-14 (without bracket)

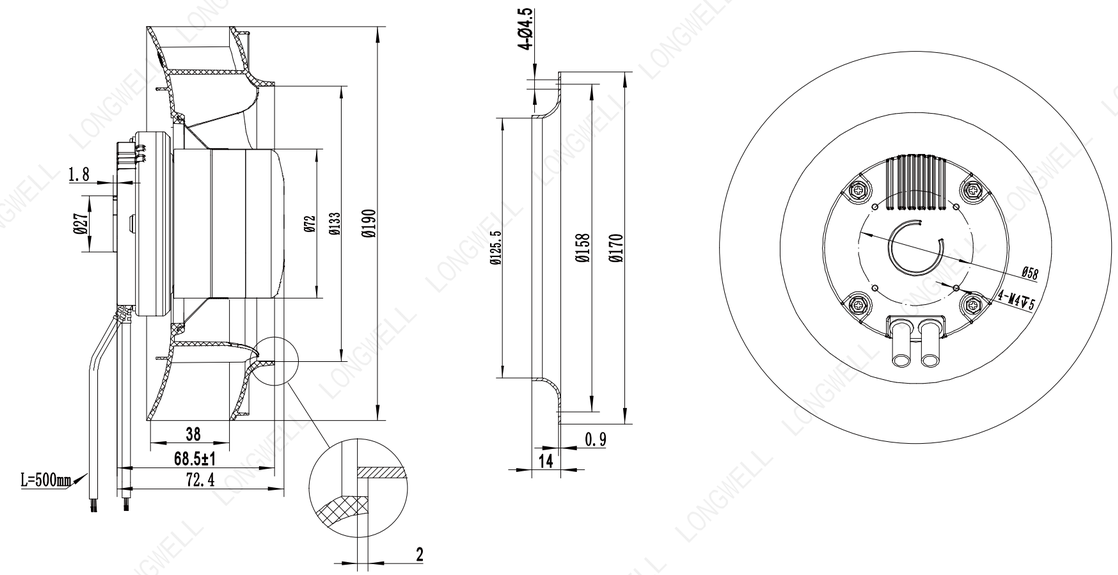

LWBE3G190-072PS-06 (with bracket)

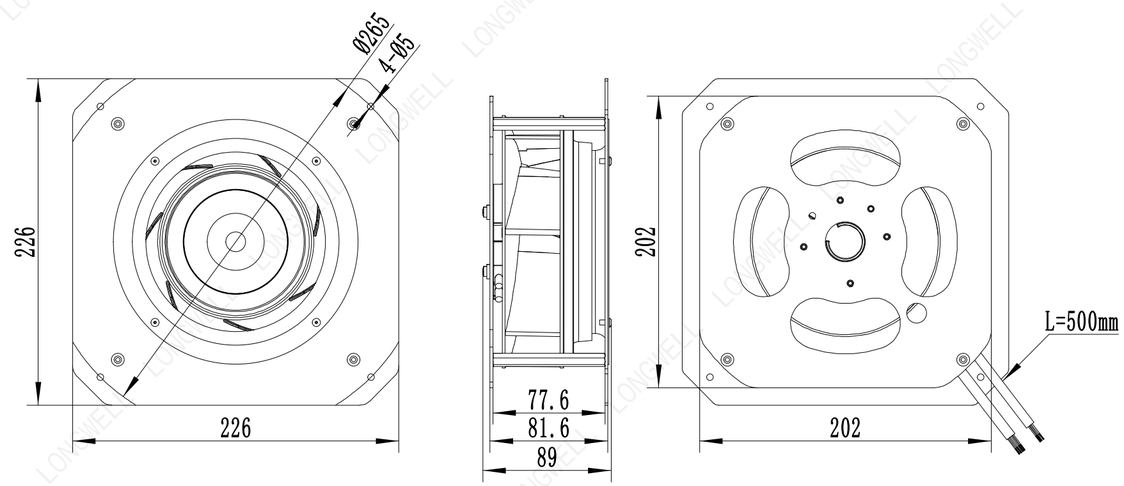

Ningbo Longwell Electric Technology CO, LTD
https://www.longwellfans.com Email:sales@zjlongwell.com

LWBE-190 Series

Product Characteristic

- Impeller Material: PA6+GF
- Supply Voltage: 230V,50/60Hz
- Mode Of Operation: S1
- Protection Class: IP55
- Insulation Class: F
- Operation Temperature: -25℃～+60℃
- Techniacal Feature: Control input 0-10VDC/PWM,Tech output,Locked-Rotor protection,Reverse Polarity Over-voltage protection, Soft Start Protection.

Technical Specifications

Model	Voltage (V)	Input Power (W)	Current (A)	Air Volume (m³/h)	Static Pressure (Pa)	Speed (RPM)	Noise [dB(A)]
LWBE3G190-072PS-01	230	87	0.65	814	587	3300	70

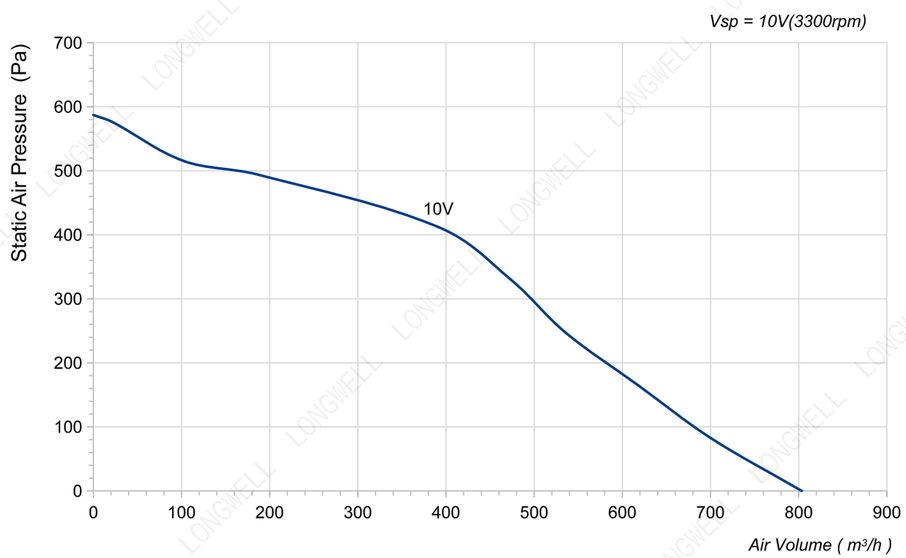

LWBE3G190-072NS-13 (without bracket)

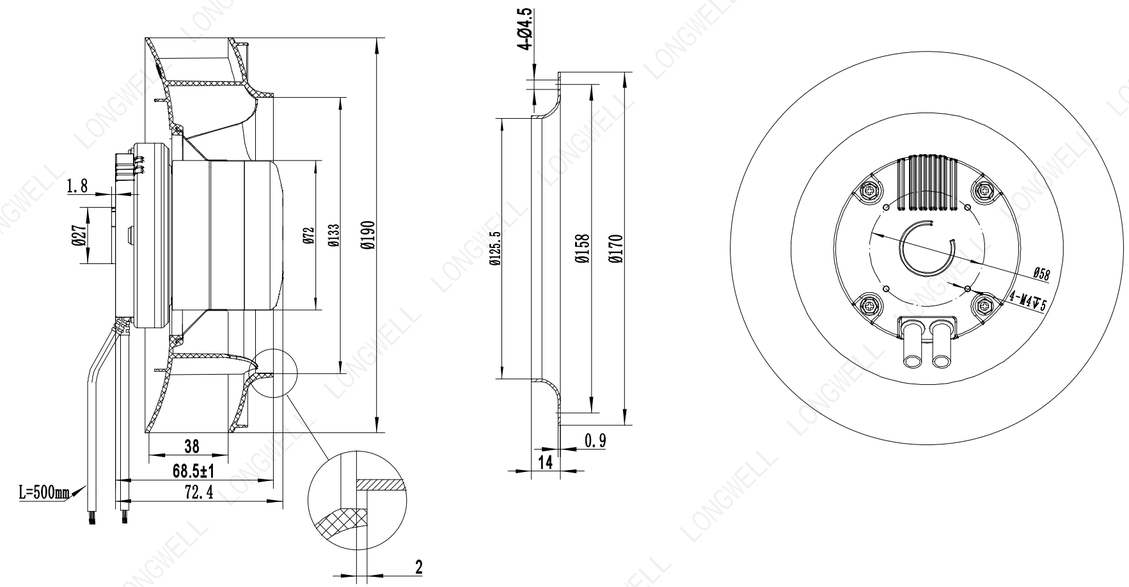

LWBE3G190-072PS-01 (with bracket)

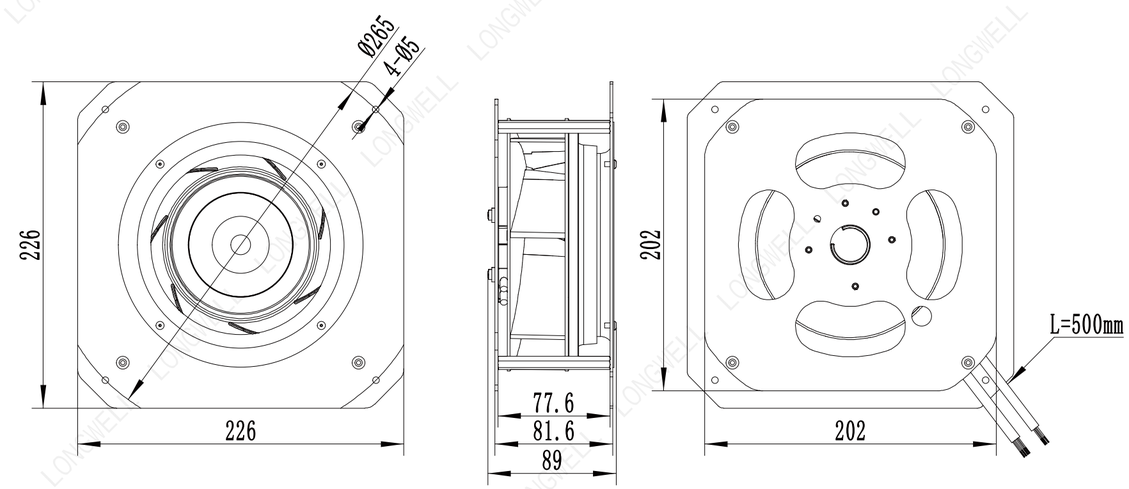

Ningbo Longwell Electric Technology CO, LTD
https://www.longwellfans.com Email:sales@zjlongwell.com

LWBE-190 Series

Product Characteristic

- Impeller Material: PA6+GF
- Supply Voltage: 230V,50/60Hz
- Mode Of Operation: S1
- Protection Class: IP55
- Insulation Class: F
- Operation Temperature: -25℃～+60℃
- Techniacal Feature: Control input 0-10VDC/PWM,Tech output,Locked-Rotor protection,Reverse Polarity Over-voltage protection, Soft Start Protection.

Technical Specifications

Model	Voltage (V)	Input Power (W)	Current (A)	Air Volume (m³/h)	Static Pressure (Pa)	Speed (RPM)	Noise [dB(A)]
LWBE3G190-072PS-02	230	115	0.9	855	876	3800	71

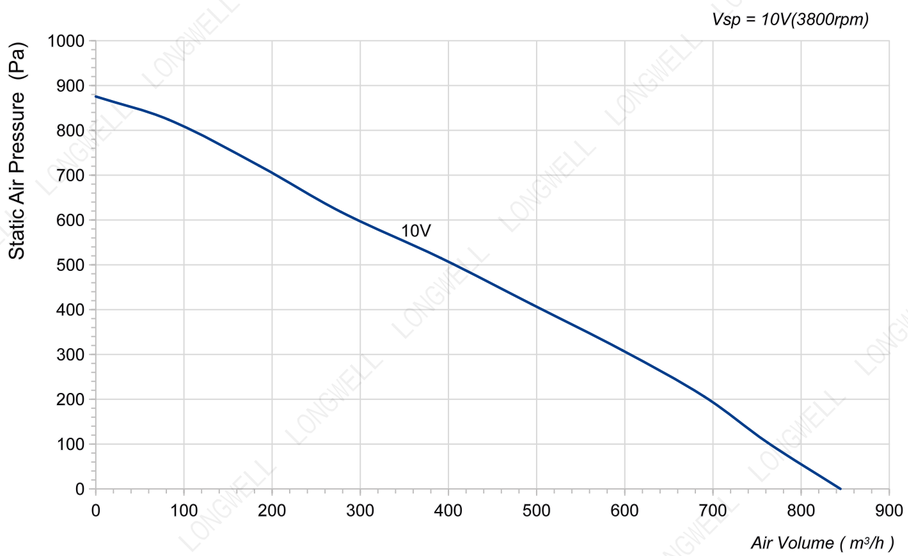

LWBE3G190-072NS-12 (without bracket)

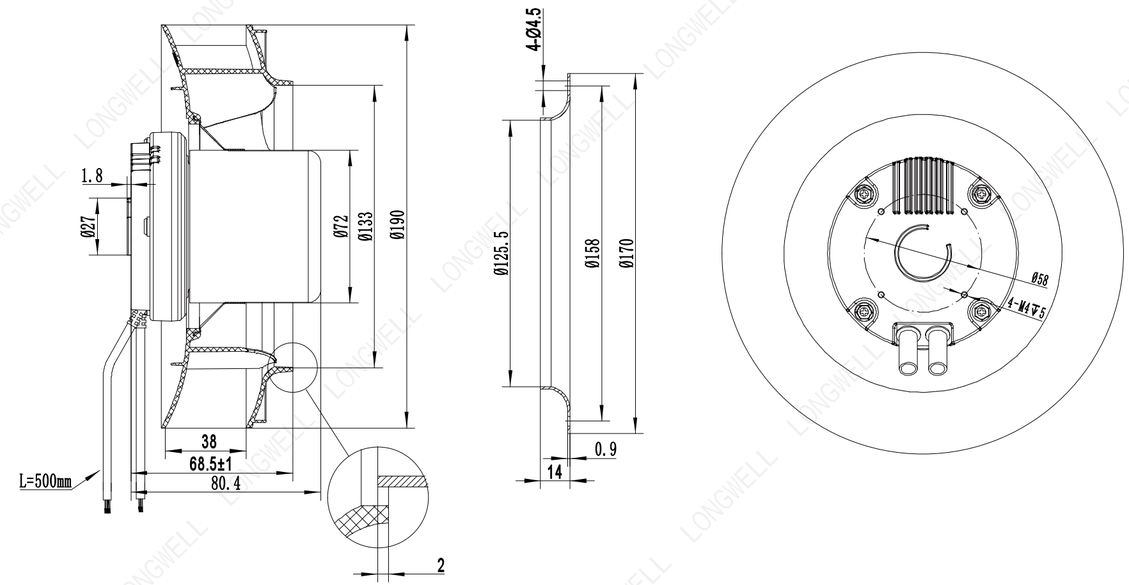

LWBE3G190-072PS-02 (with bracket)

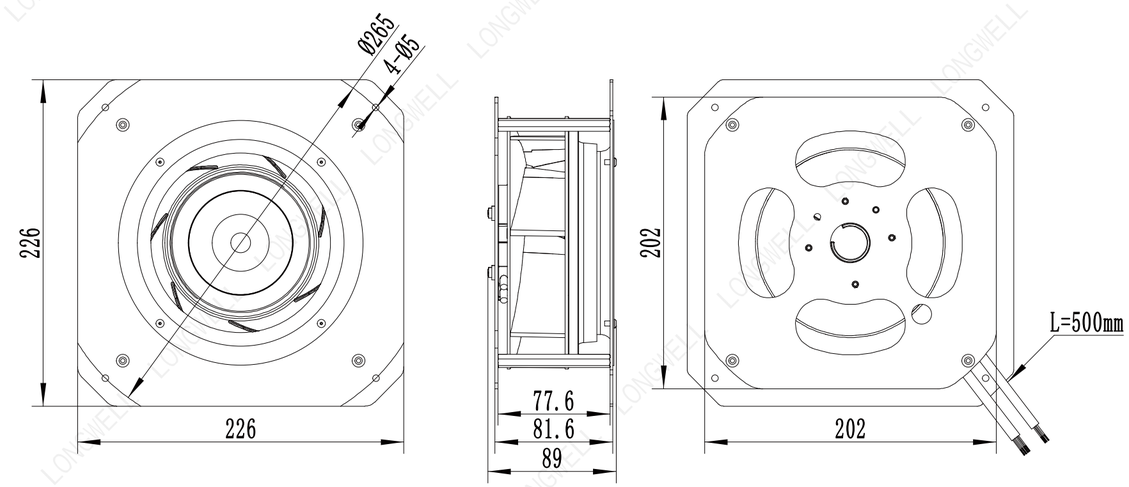

Ningbo Longwell Electric Technology CO, LTD
https://www.longwellfans.com Email:sales@zjlongwell.com

LWBE-190 Series

Product Characteristic

- Impeller Material: PA6+GF
- Supply Voltage: 230V,50/60Hz
- Mode Of Operation: S1
- Protection Class: IP55
- Insulation Class: F
- Operation Temperature: -25℃～+60℃
- Techniacal Feature: Control input 0-10VDC/PWM,Tech output,Locked-Rotor protection,Reverse Polarity Over-voltage protection, Soft Start Protection.

Technical Specifications

Model	Voltage (V)	Input Power (W)	Current (A)	Air Volume (m³/h)	Static Pressure (Pa)	Speed (RPM)	Noise [dB(A)]
LWBE3G190-072PS-07	230	135	1.05	855	803	3700	70

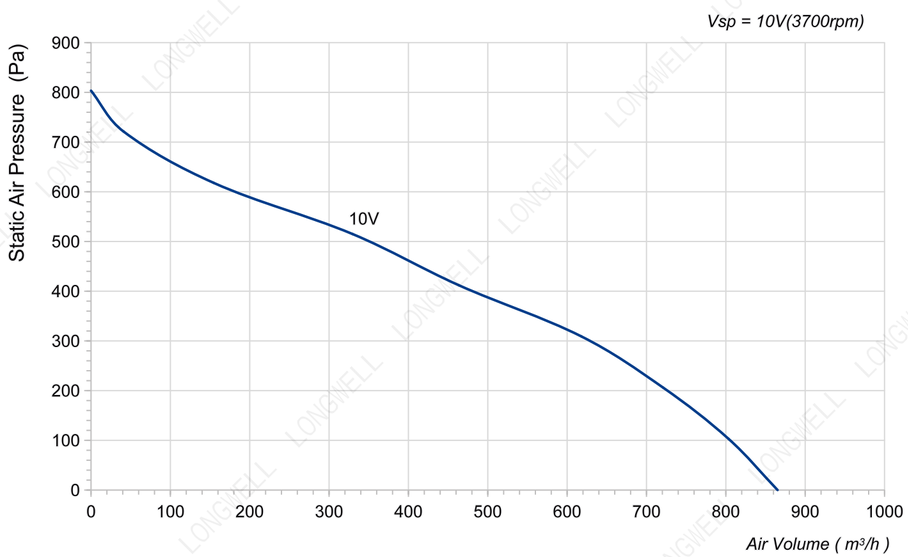

LWBE3G190-072NS-15 (without bracket)

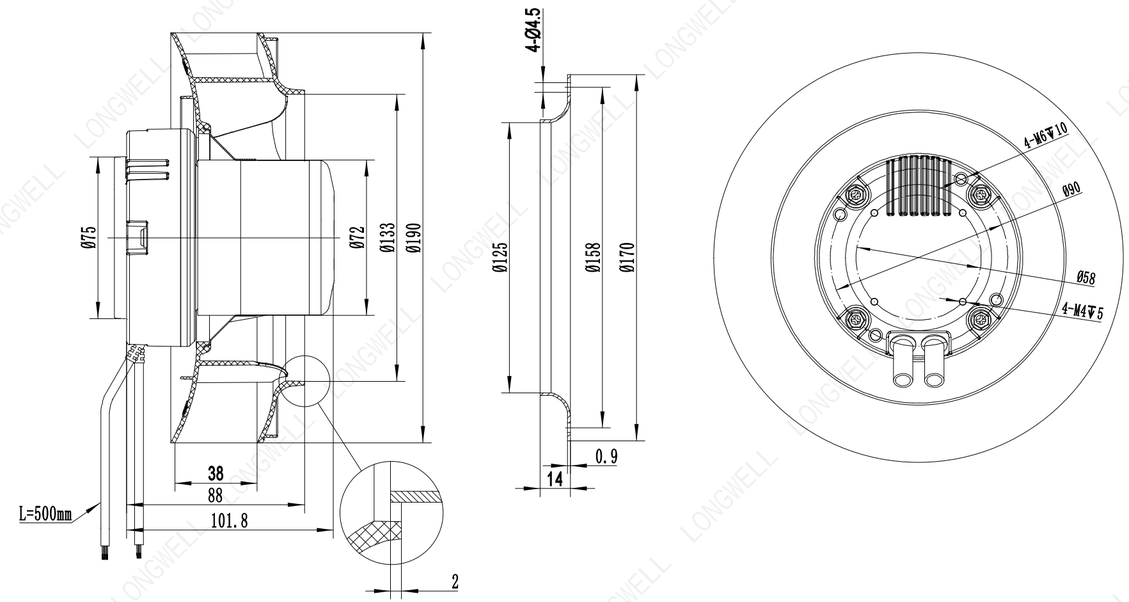

LWBE3G190-072PS-07 (with bracket)

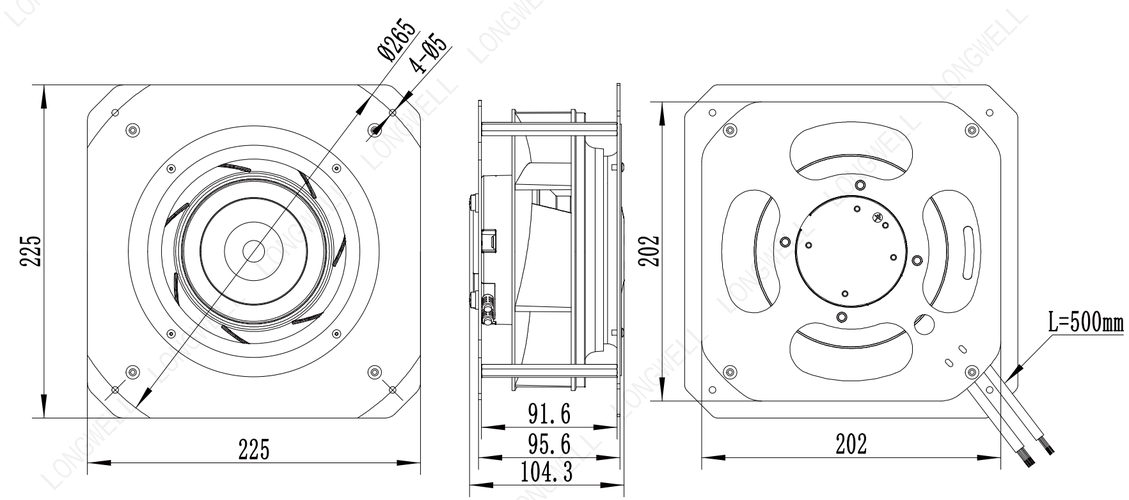

Ningbo Longwell Electric Technology CO, LTD
https://www.longwellfans.com Email:sales@zjlongwell.com

LWBE-190 Series

Product Characteristic

- Impeller Material: PA6+GF
- Supply Voltage: 230V,50/60Hz
- Mode Of Operation: S1
- Protection Class: IP55
- Insulation Class: F
- Operation Temperature: -25℃～+60℃
- Techniacal Feature: Control input 0-10VDC/PWM,Tech output,Locked-Rotor protection,Reverse Polarity Over-voltage protection, Soft Start Protection.

Technical Specifications

Model	Voltage (V)	Input Power (W)	Current (A)	Air Volume (m³/h)	Static Pressure (Pa)	Speed (RPM)	Noise [dB(A)]
LWBE3G190-072PS-03	230	170	1.3	973	1009	4100	72

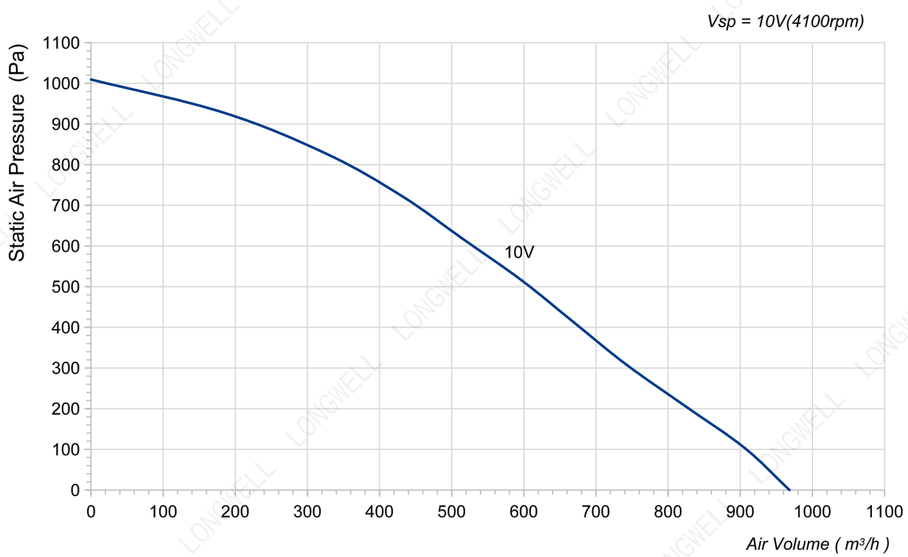

LWBE3G190-072NS-06 (without bracket)

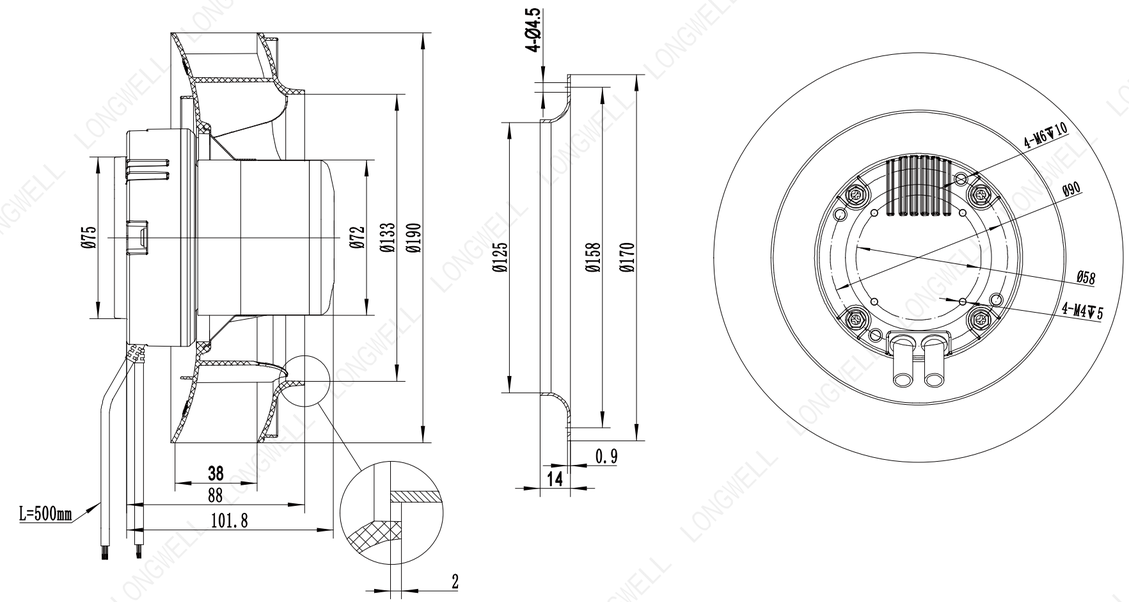

LWBE3G190-072PS-03 (with bracket)

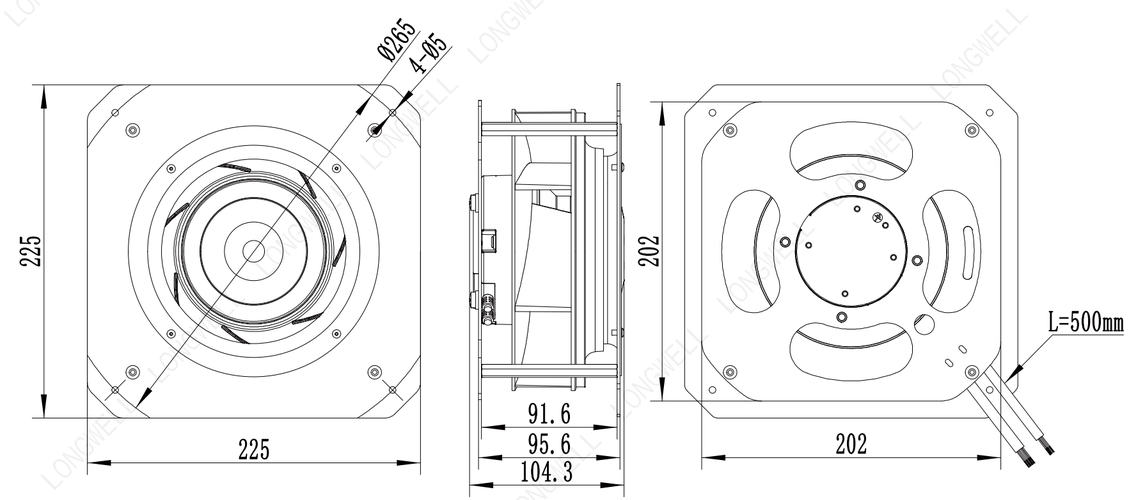

Ningbo Longwell Electric Technology CO, LTD
https://www.longwellfans.com Email:sales@zjlongwell.com

LWBE-220 Series

Product Characteristic

- Impeller Material: PA6+GF
- Supply Voltage: 230V,50/60Hz
- Mode Of Operation: S1
- Protection Class: IP55
- Insulation Class: F
- Operation Temperature: -25℃～+60℃
- Techniacal Feature: Control input 0-10VDC/PWM,Tech output,Locked-Rotor protection,Reverse Polarity Over-voltage protection, Soft Start Protection.

Technical Specifications

Model	Voltage (V)	Input Power (W)	Current (A)	Air Volume (m³/h)	Static Pressure (Pa)	Speed (RPM)	Noise [dB(A)]
LWBE3G220-072PS-01	230	86	0.71	937	721	2470	68

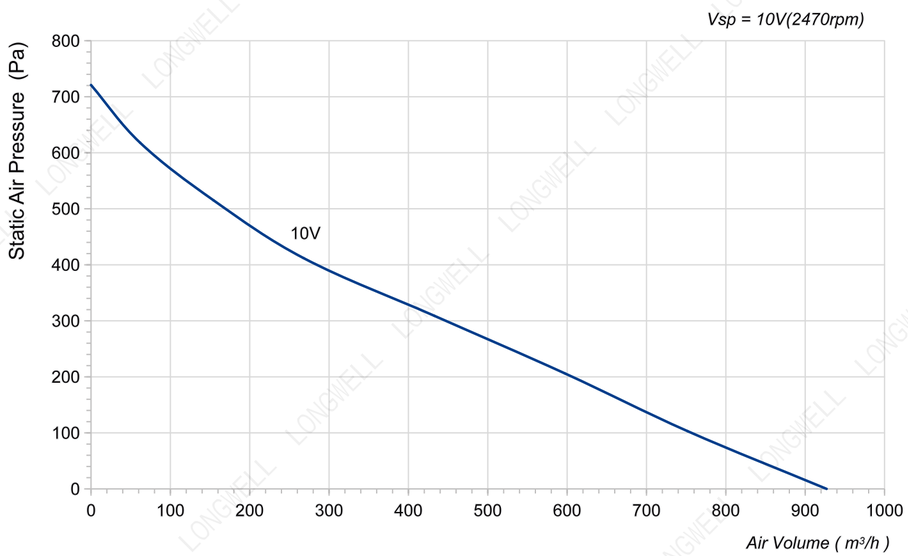

LWBE3G220-072NS-07 (without bracket)

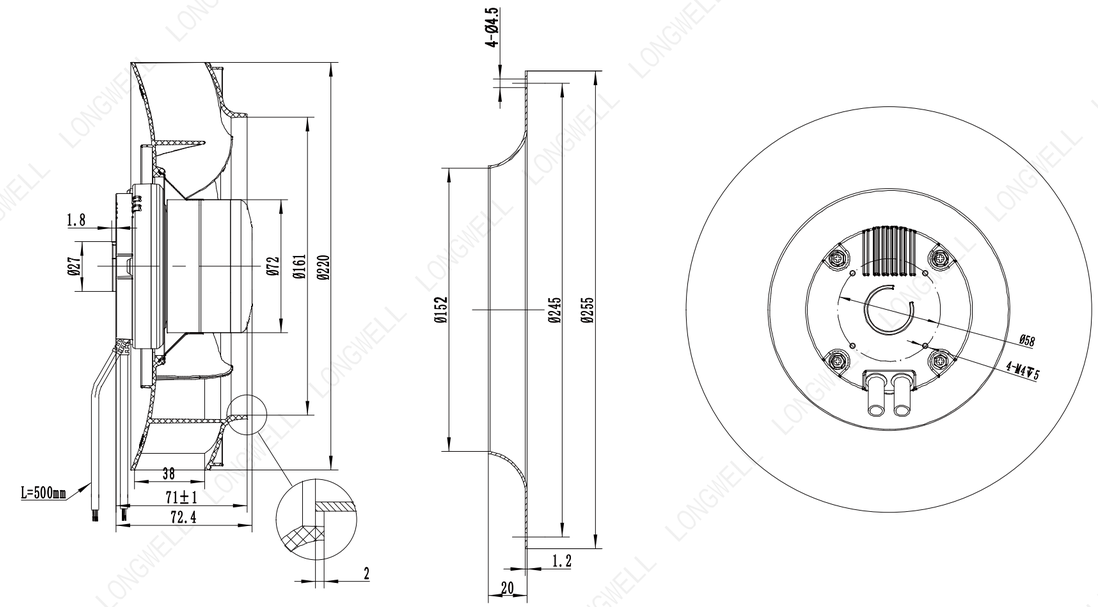

LWBE3G220-072PS-01 (with bracket)

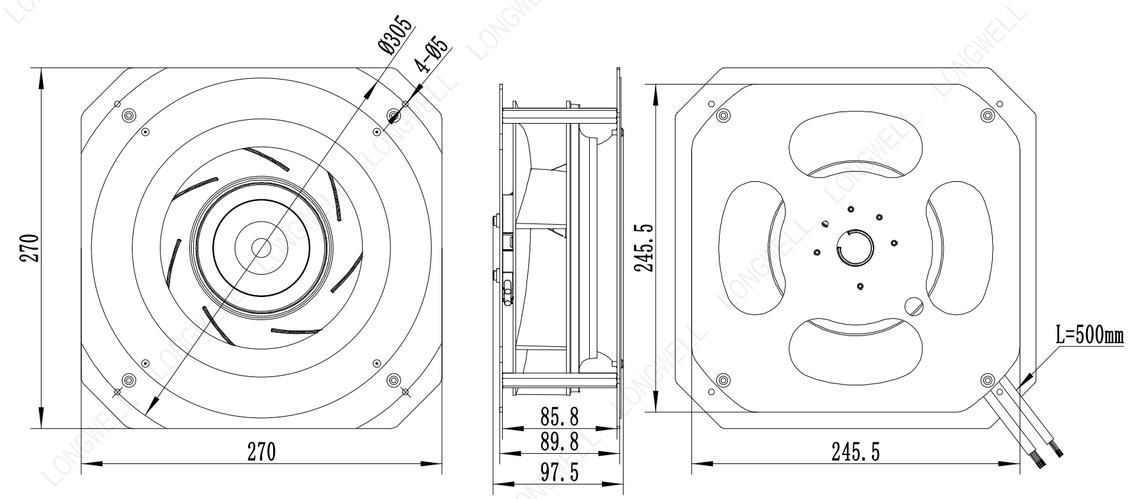

Ningbo Longwell Electric Technology CO, LTD
https://www.longwellfans.com Email:sales@zjlongwell.com

LWBE-220 Series

Product Characteristic

- Impeller Material: PA6+GF
- Supply Voltage: 230V,50/60Hz
- Mode Of Operation: S1
- Protection Class: IP55
- Insulation Class: F
- Operation Temperature: -25℃～+60℃
- Techniacal Feature: Control input 0-10VDC/PWM,Tech output,Locked-Rotor protection,Reverse Polarity Over-voltage protection, Soft Start Protection.

Technical Specifications

Model	Voltage (V)	Input Power (W)	Current (A)	Air Volume (m³/h)	Static Pressure (Pa)	Speed (RPM)	Noise [dB(A)]
LWBE3G220-072PS-02	230	115	0.9	1020	597	2800	69

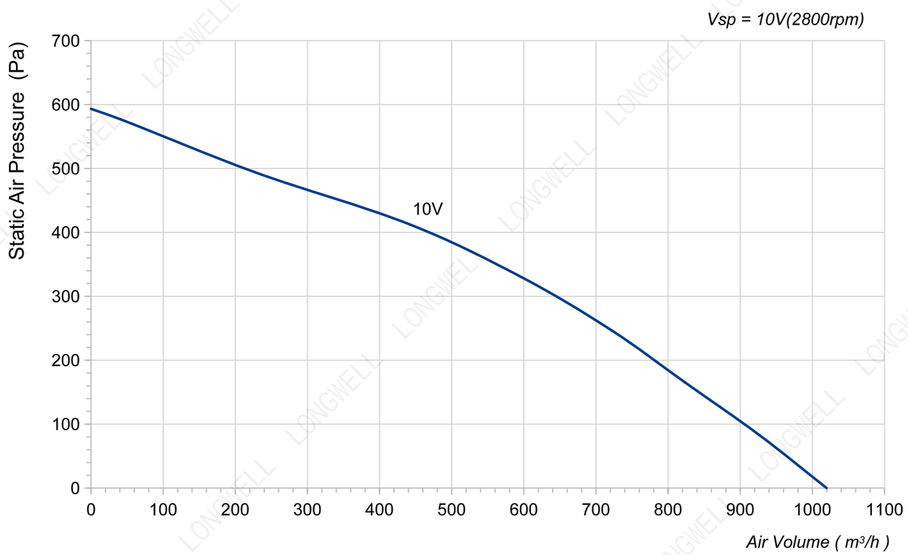

LWBE3G220-072NS-09 (without bracket)

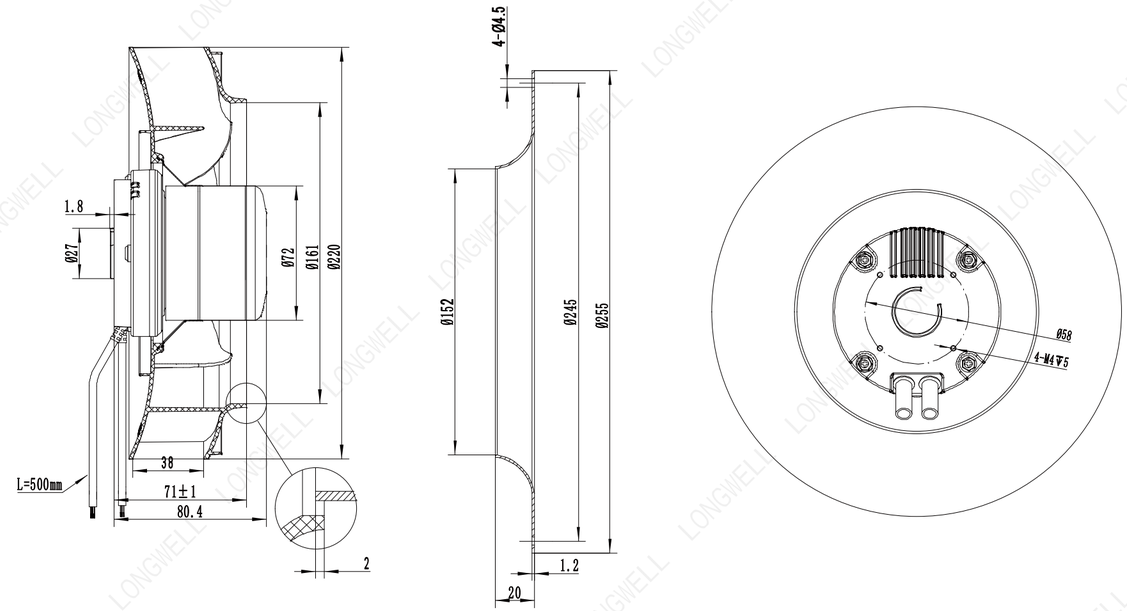

LWBE3G220-072PS-02 (with bracket)

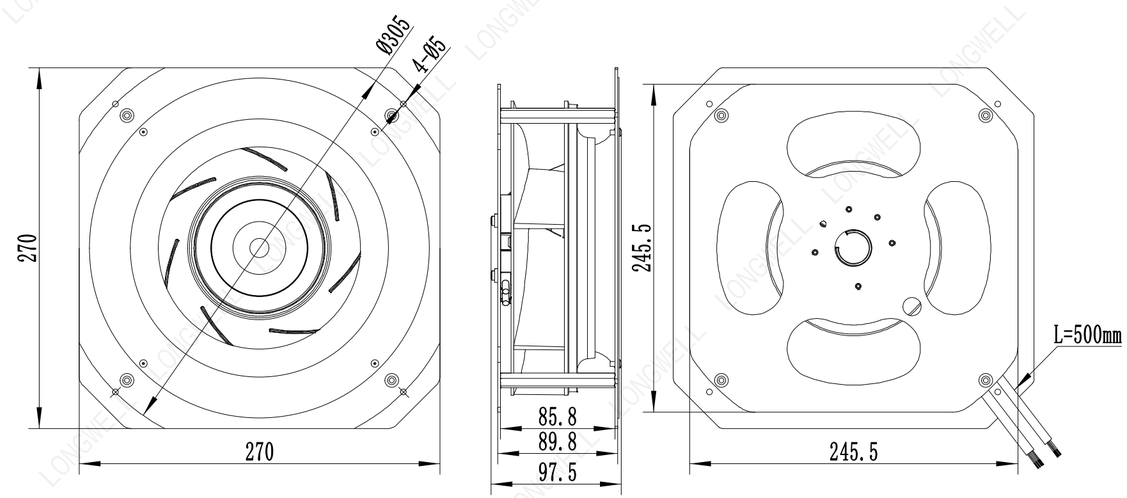

Ningbo Longwell Electric Technology CO, LTD
https://www.longwellfans.com Email:sales@zjlongwell.com

LWBE-220 Series

Product Characteristic

- Impeller Material: PA6+GF
- Supply Voltage: 230V,50/60Hz
- Mode Of Operation: S1
- Protection Class: IP55
- Insulation Class: F
- Operation Temperature: -25℃～+60℃
- Techniacal Feature: Control input 0-10VDC/PWM,Tech output,Locked-Rotor protection,Reverse Polarity Over-voltage protection, Soft Start Protection.

Technical Specifications

Model	Voltage (V)	Input Power (W)	Current (A)	Air Volume (m³/h)	Static Pressure (Pa)	Speed (RPM)	Noise [dB(A)]
LWBE3G220-072PS-03	230	168	1.27	1185	979	3250	70

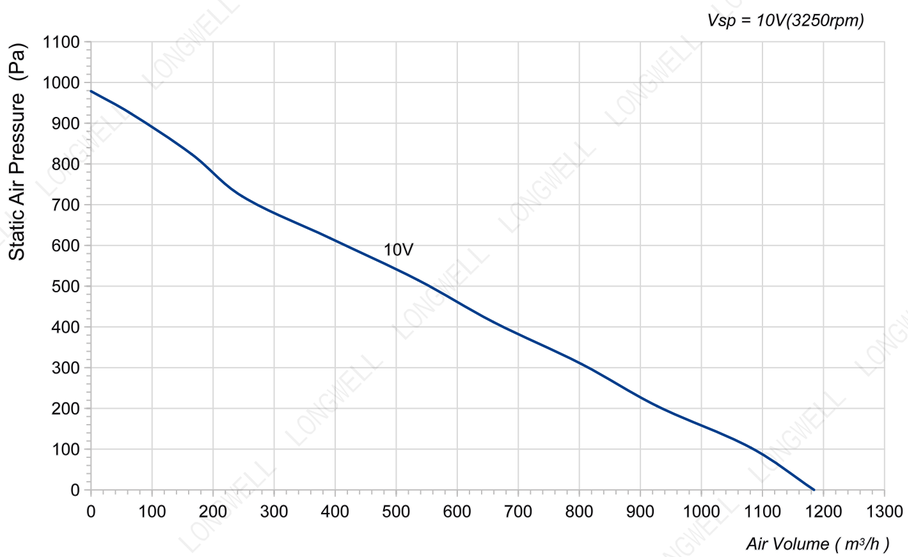

LWBE3G220-072NS-08 (without bracket)

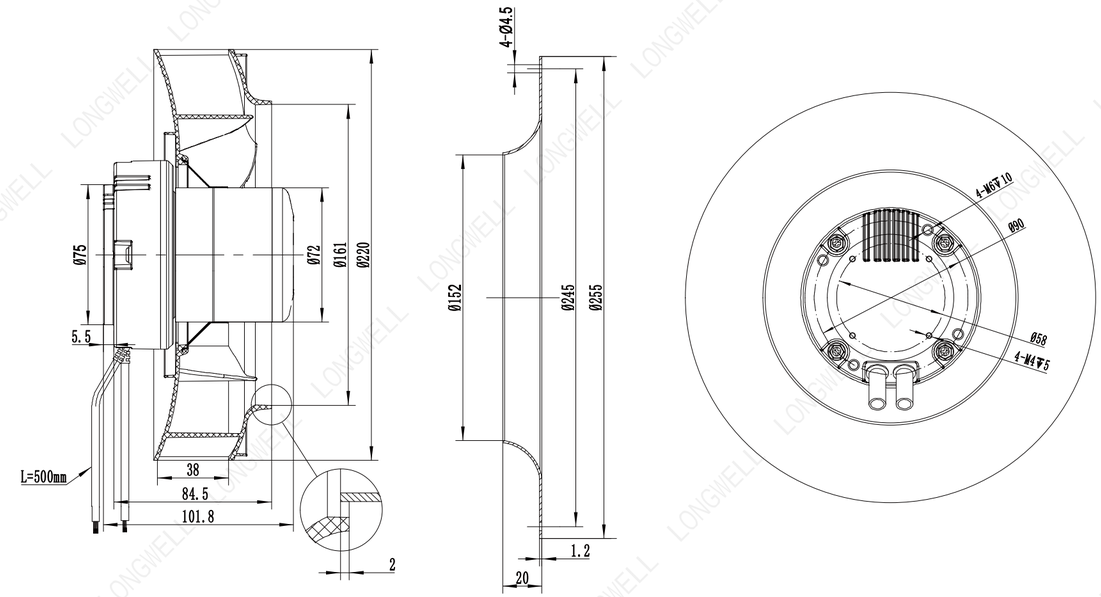

LWBE3G220-072PS-03 (with bracket)

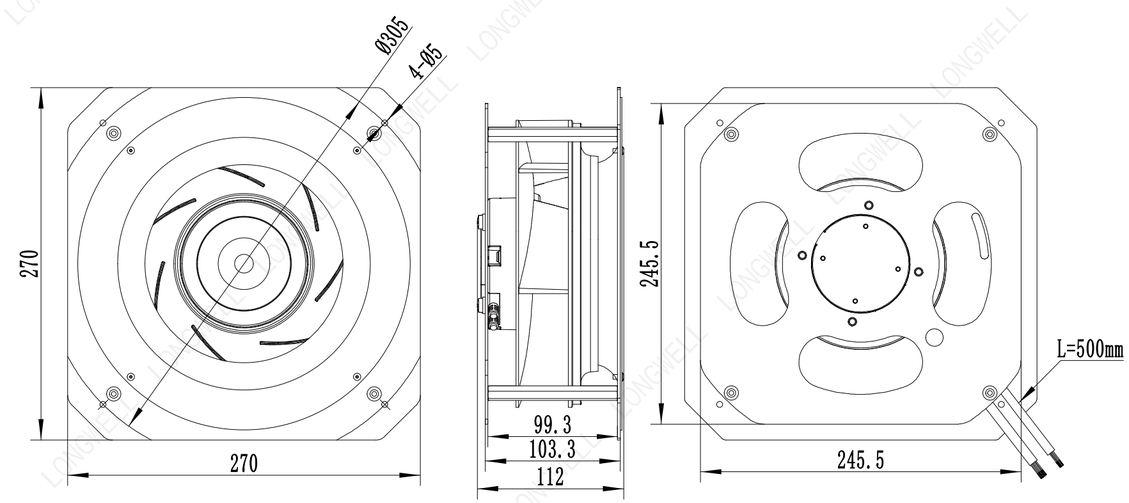

Ningbo Longwell Electric Technology CO, LTD
https://www.longwellfans.com Email:sales@zjlongwell.com

LWBE-225 Series

Product Characteristic

- Impeller Material: PA6+GF
- Supply Voltage: 230V,50/60Hz
- Mode Of Operation: S1
- Protection Class: IP55
- Insulation Class: F
- Operation Temperature: -25℃～+60℃
- Techniacal Feature: Control input 0-10VDC/PWM,Tech output,Locked-Rotor protection,Reverse Polarity Over-voltage protection, Soft Start Protection.

Technical Specifications

Model	Voltage (V)	Input Power (W)	Current (A)	Air Volume (m³/h)	Static Pressure (Pa)	Speed (RPM)	Noise [dB(A)]
LWBE3G225-072PS-01	230	85	0.7	1009	618	2300	65

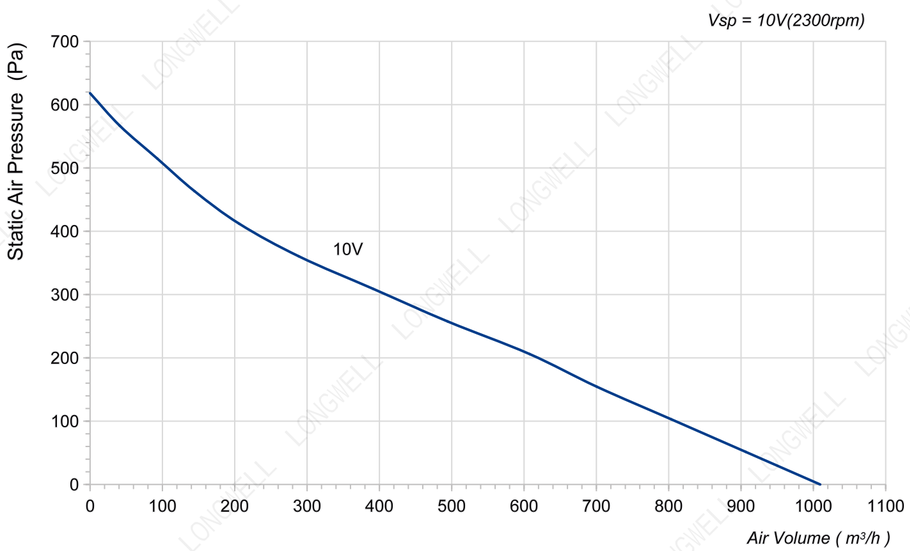

LWBE3G225-072NS-11 (without bracket)

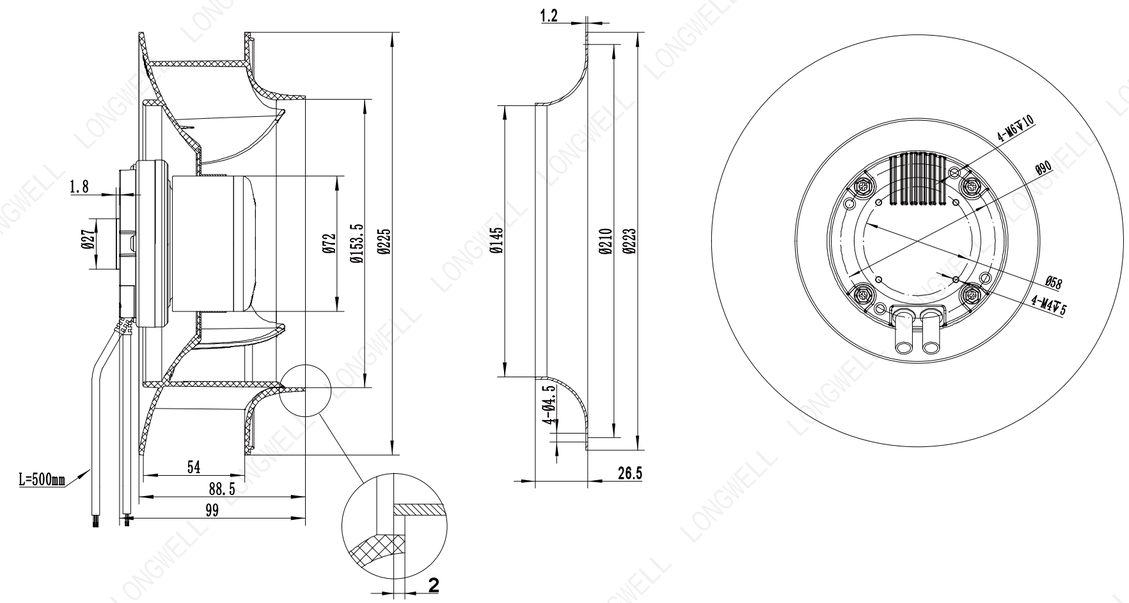

LWBE3G225-072PS-01 (with bracket)

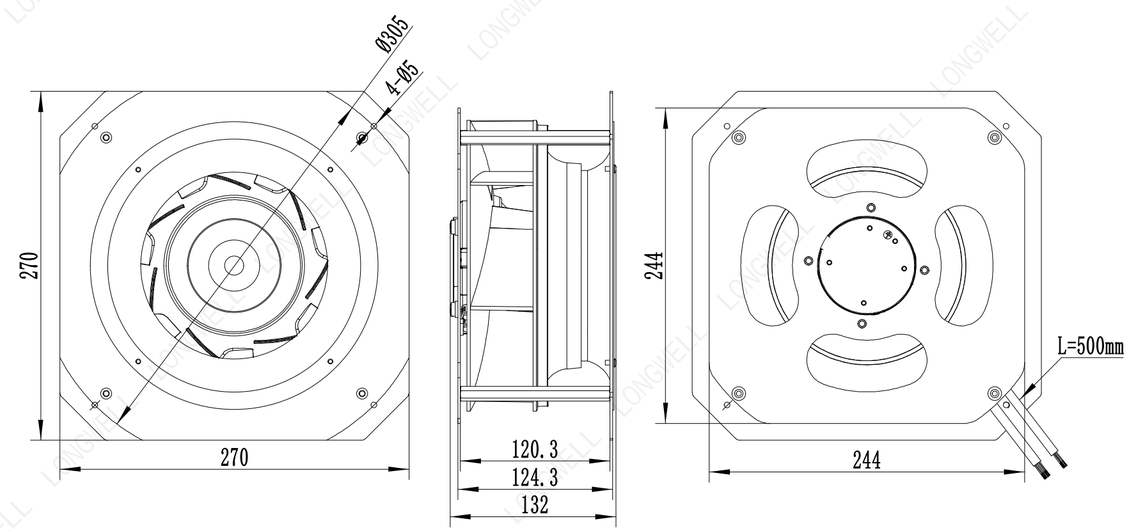

Ningbo Longwell Electric Technology CO, LTD
https://www.longwellfans.com Email:sales@zjlongwell.com

LWBE-225 Series

Product Characteristic

- Impeller Material: PA6+GF
- Supply Voltage: 230V,50/60Hz
- Mode Of Operation: S1
- Protection Class: IP55
- Insulation Class: F
- Operation Temperature: -25℃～+60℃
- Techniacal Feature: Control input 0-10VDC/PWM,Tech output,Locked-Rotor protection,Reverse Polarity Over-voltage protection, Soft Start Protection.

Technical Specifications

Model	Voltage (V)	Input Power (W)	Current (A)	Air Volume (m³/h)	Static Pressure (Pa)	Speed (RPM)	Noise [dB(A)]
LWBE3G225-072PS-02	230	115	0.9	1185	670	2600	67

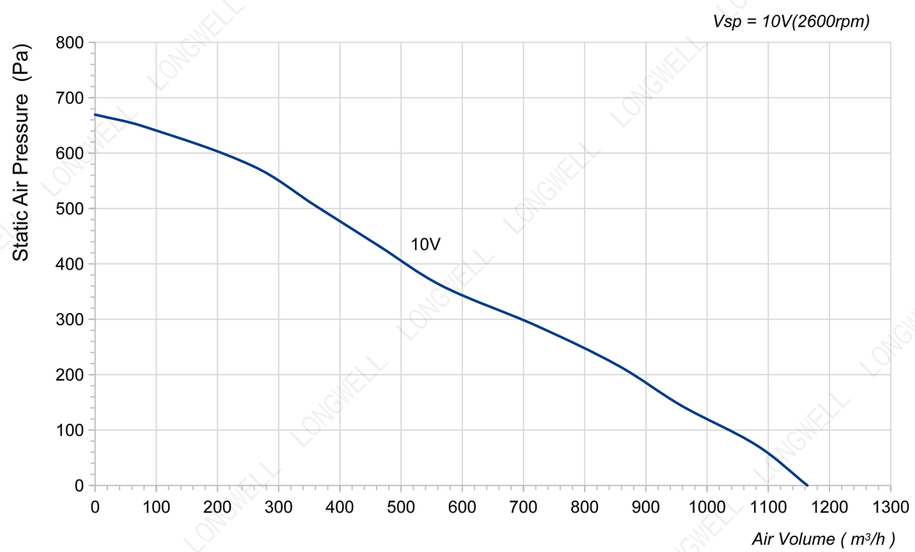

LWBE3G225-072NS-13 (without bracket)

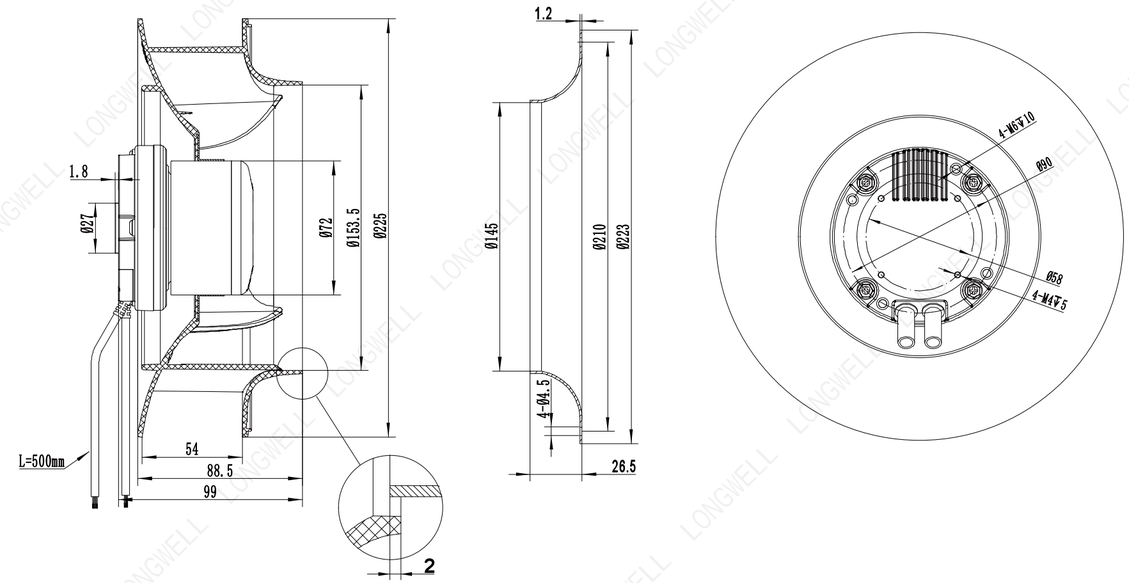

LWBE3G225-072PS-02 (with bracket)

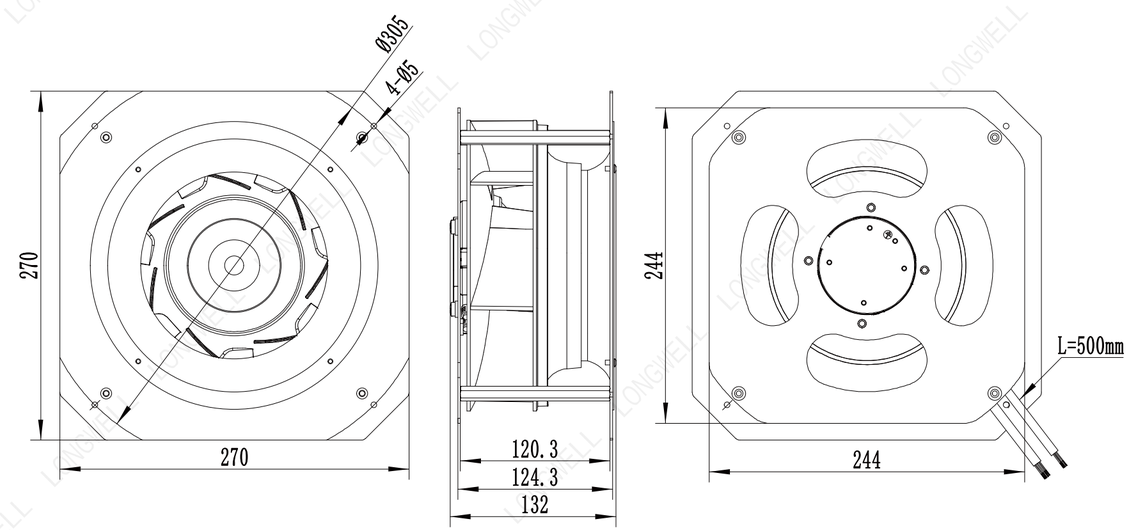

Ningbo Longwell Electric Technology CO, LTD
https://www.longwellfans.com Email:sales@zjlongwell.com

LWBE-225 Series

Product Characteristic

- Impeller Material: PA6+GF
- Supply Voltage: 230V,50/60Hz
- Mode Of Operation: S1
- Protection Class: IP55
- Insulation Class: F
- Operation Temperature: -25℃～+60℃
- Techniacal Feature: Control input 0-10VDC/PWM,Tech output,Locked-Rotor protection,Reverse Polarity Over-voltage protection, Soft Start Protection.

Technical Specifications

Model	Voltage (V)	Input Power (W)	Current (A)	Air Volume (m³/h)	Static Pressure (Pa)	Speed (RPM)	Noise [dB(A)]
LWBE3G225-072PS-03	230	170	1.26	1313	1030	3100	70

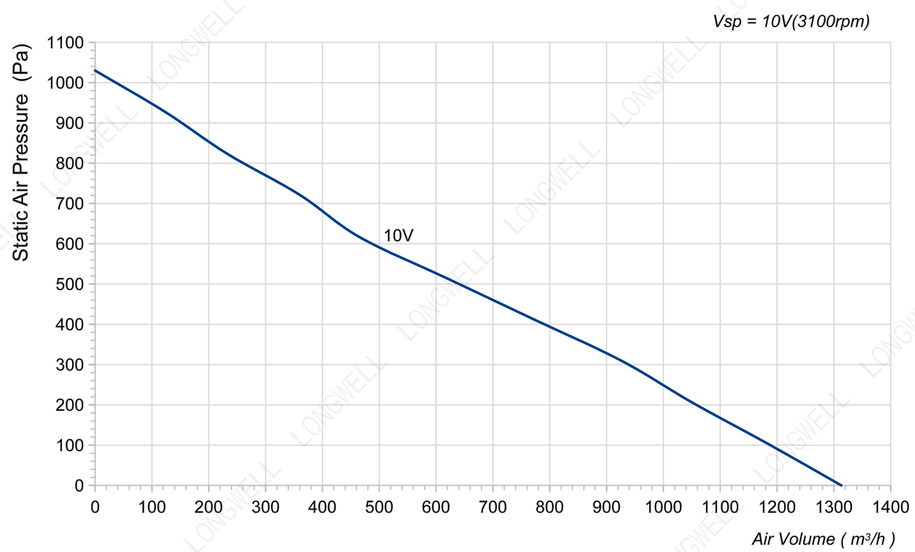

LWBE3G225-072NS-07 (without bracket)

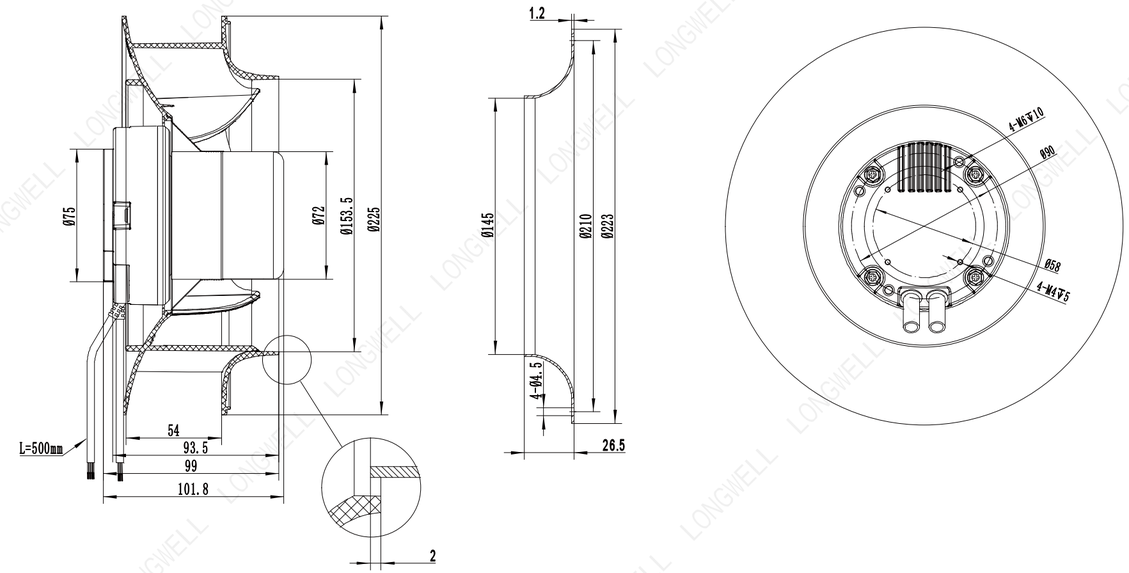

LWBE3G225-072PS-03 (with bracket)

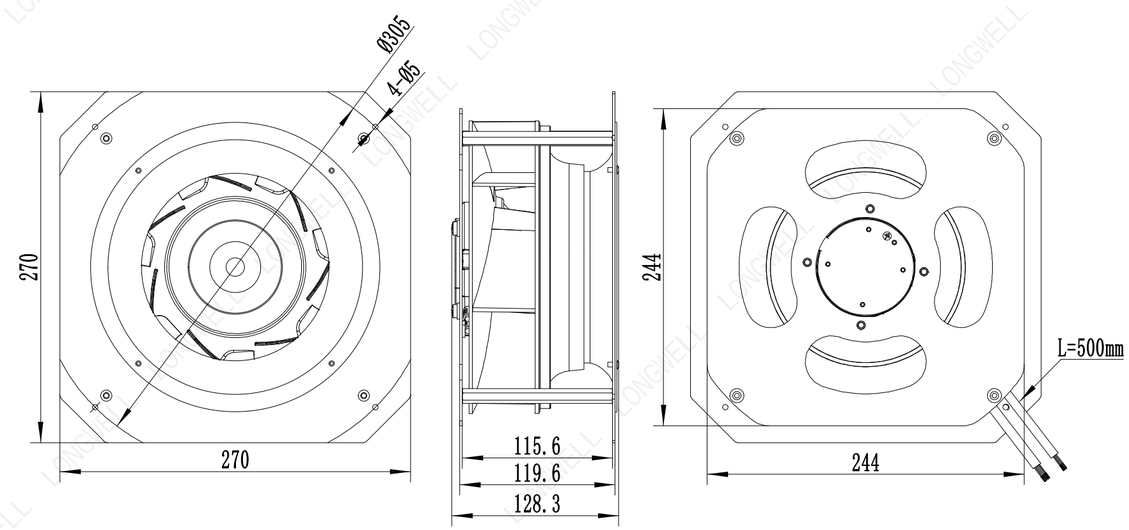

Ningbo Longwell Electric Technology CO, LTD
https://www.longwellfans.com Email:sales@zjlongwell.com

LWBE-225 Series

Product Characteristic

- Impeller Material: PA6+GF
- Supply Voltage: 230V,50/60Hz
- Mode Of Operation: S1
- Protection Class: IP55
- Insulation Class: F
- Operation Temperature: -25℃～+60℃
- Techniacal Feature: Control input 0-10VDC/PWM,Tech output,Locked-Rotor protection,Reverse Polarity Over-voltage protection, Soft Start Protection.

Technical Specifications

Model	Voltage (V)	Input Power (W)	Current (A)	Air Volume (m³/h)	Static Pressure (Pa)	Speed (RPM)	Noise [dB(A)]
LWBE3G225-092PS-04	230	230	1.7	1360	906	3600	71

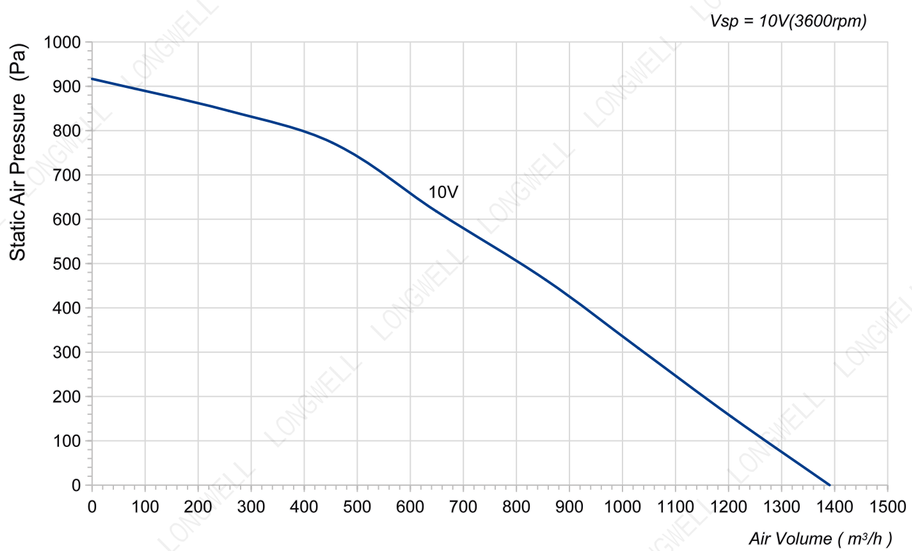

LWBE3G225-092NS-10 (without bracket)

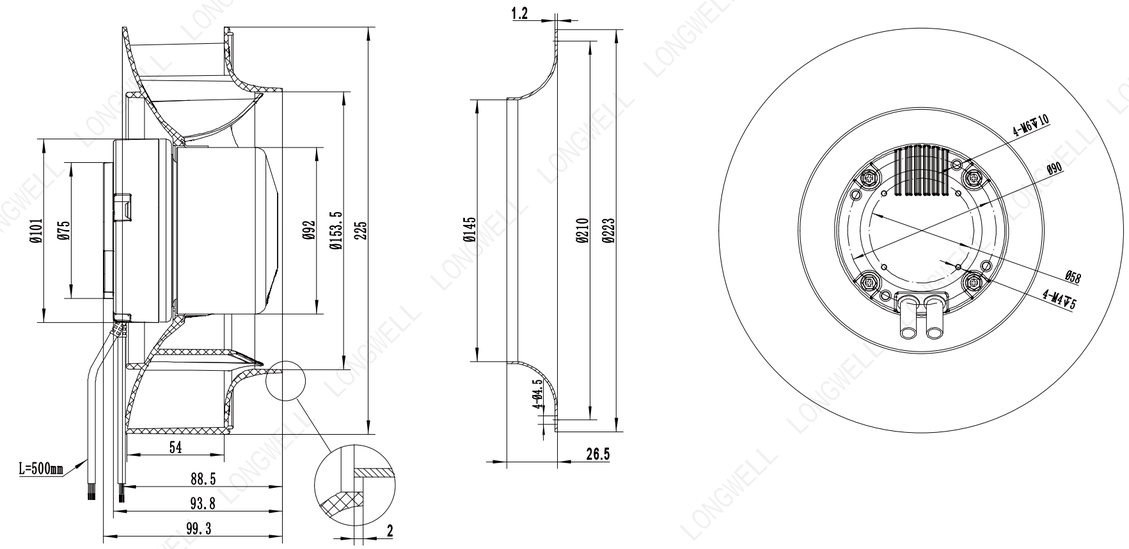

LWBE3G225-092PS-04 (with bracket)

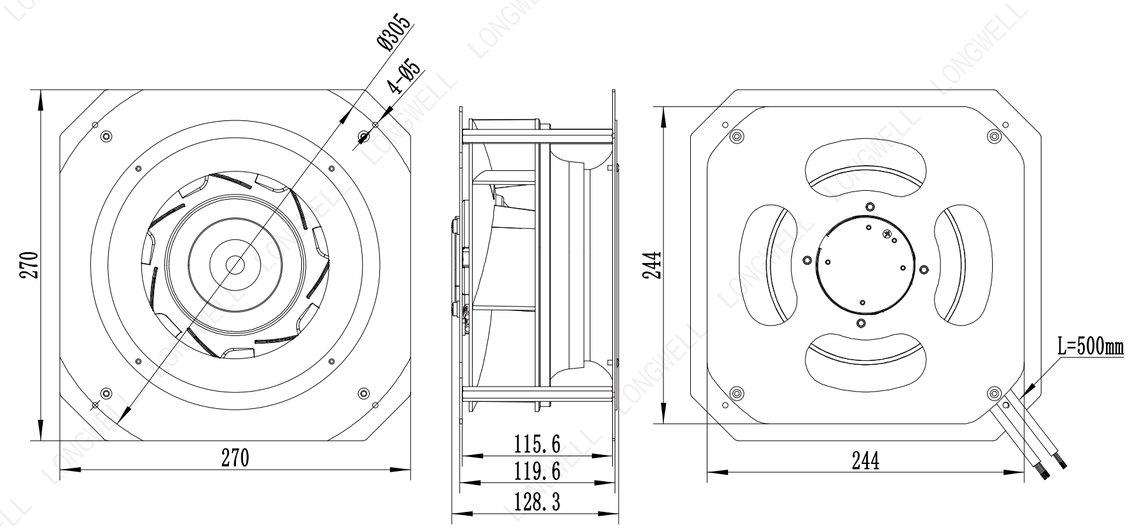

Ningbo Longwell Electric Technology CO, LTD
https://www.longwellfans.com Email:sales@zjlongwell.com

LWBE-250 Series

Product Characteristic

- Impeller Material: PA6+GF
- Supply Voltage: 230V,50/60Hz
- Mode Of Operation: S1
- Protection Class: IP55
- Insulation Class: F
- Operation Temperature: -25℃～+60℃
- Techniacal Feature: Control input 0-10VDC/PWM,Tech output,Locked-Rotor protection,Reverse Polarity Over-voltage protection, Soft Start Protection.

Technical Specifications

Model	Voltage (V)	Input Power (W)	Current (A)	Air Volume (m³/h)	Static Pressure (Pa)	Speed (RPM)	Noise [dB(A)]
LWBE3G250-072PS-01	230	85	1.26	1185	618	1810	62

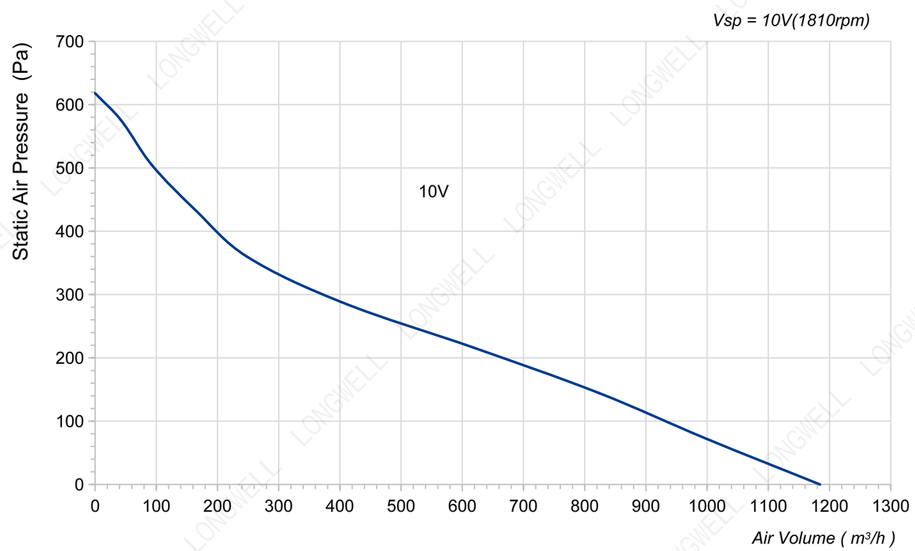

LWBE3G250-072NS-08 (without bracket)

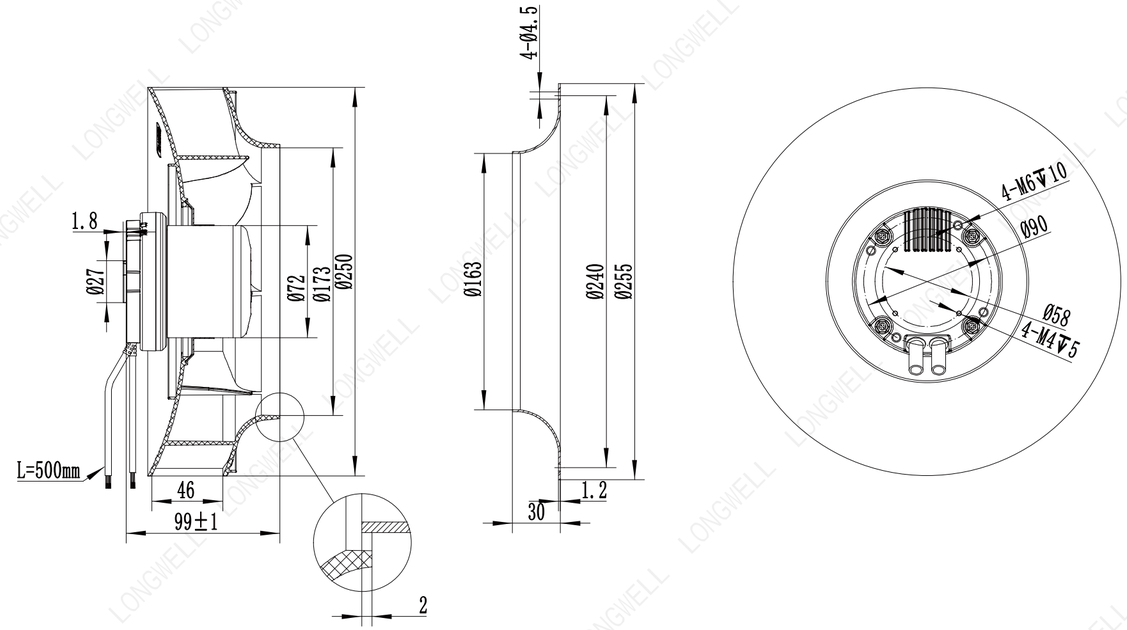

LWBE3G250-072PS-01 (with bracket)

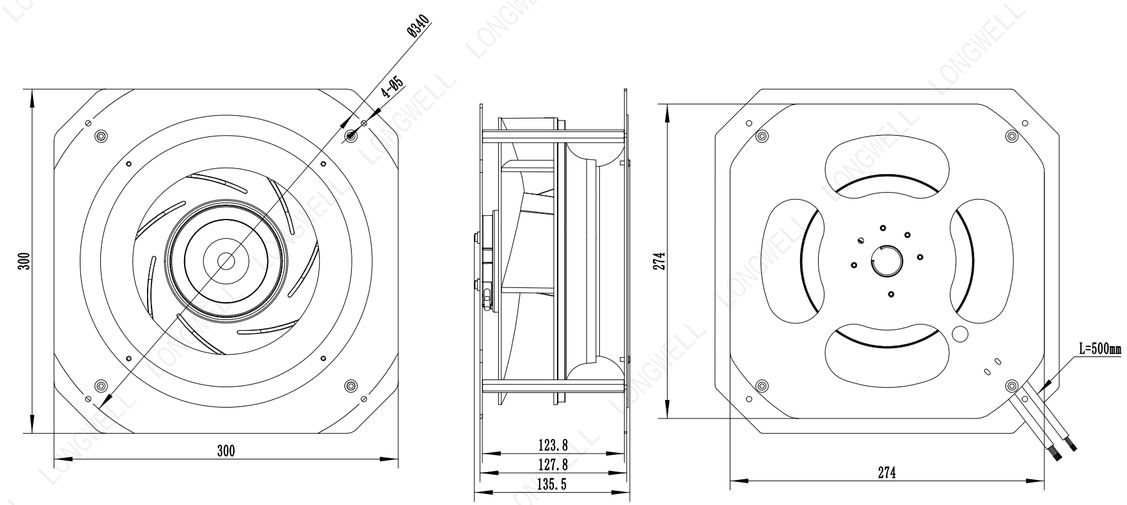

Ningbo Longwell Electric Technology CO, LTD
https://www.longwellfans.com Email:sales@zjlongwell.com

LWBE-250 Series

Product Characteristic

- Impeller Material: PA6+GF
- Supply Voltage: 230V,50/60Hz
- Mode Of Operation: S1
- Protection Class: IP55
- Insulation Class: F
- Operation Temperature: -25℃～+60℃
- Techniacal Feature: Control input 0-10VDC/PWM,Tech output,Locked-Rotor protection,Reverse Polarity Over-voltage protection, Soft Start Protection.

Technical Specifications

Model	Voltage (V)	Input Power (W)	Current (A)	Air Volume (m³/h)	Static Pressure (Pa)	Speed (RPM)	Noise [dB(A)]
LWBE3G250-072PS-02	230	115	0.9	1236	515	2180	62

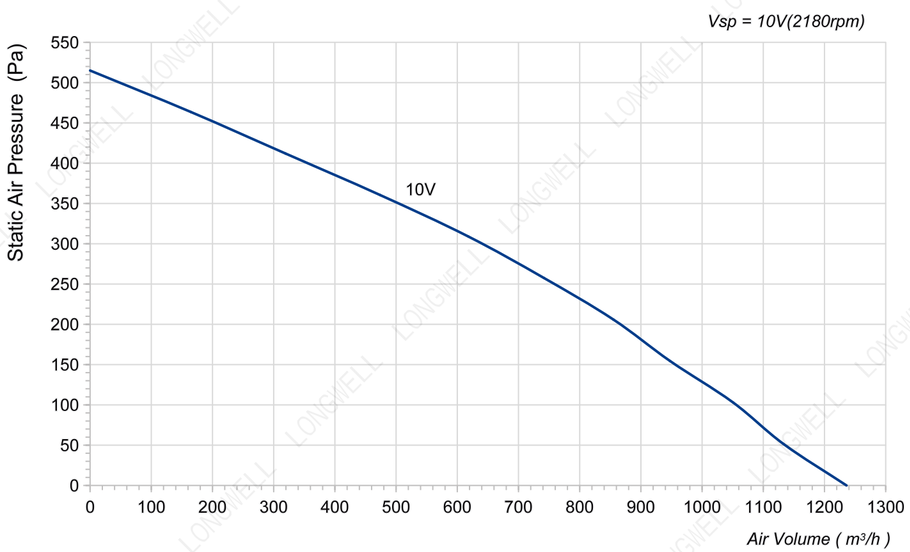

LWBE3G250-072NS-18 (without bracket)

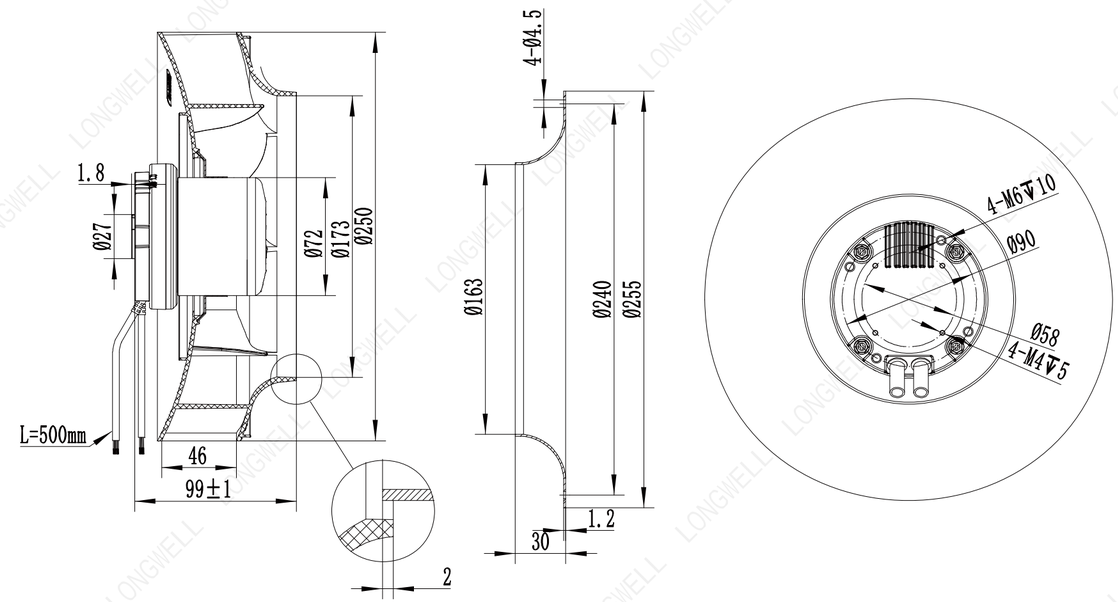

LWBE3G250-072PS-02 (with bracket)

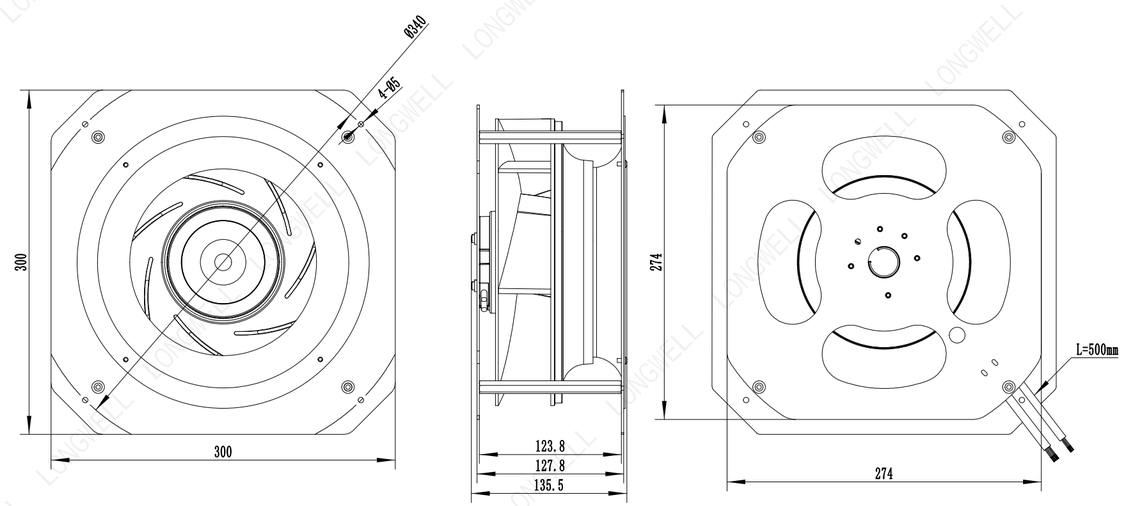

Ningbo Longwell Electric Technology CO, LTD
https://www.longwellfans.com Email:sales@zjlongwell.com

LWBE-250 Series

Product Characteristic

- Impeller Material: PA6+GF
- Supply Voltage: 230V,50/60Hz
- Mode Of Operation: S1
- Protection Class: IP55
- Insulation Class: F
- Operation Temperature: -25℃～+60℃
- Techniacal Feature: Control input 0-10VDC/PWM,Tech output,Locked-Rotor protection,Reverse Polarity Over-voltage protection, Soft Start Protection.

Technical Specifications

Model	Voltage (V)	Input Power (W)	Current (A)	Air Volume (m³/h)	Static Pressure (Pa)	Speed (RPM)	Noise [dB(A)]
LWBE3G250-072PS-04	230	169	1.27	1478	927	2570	71

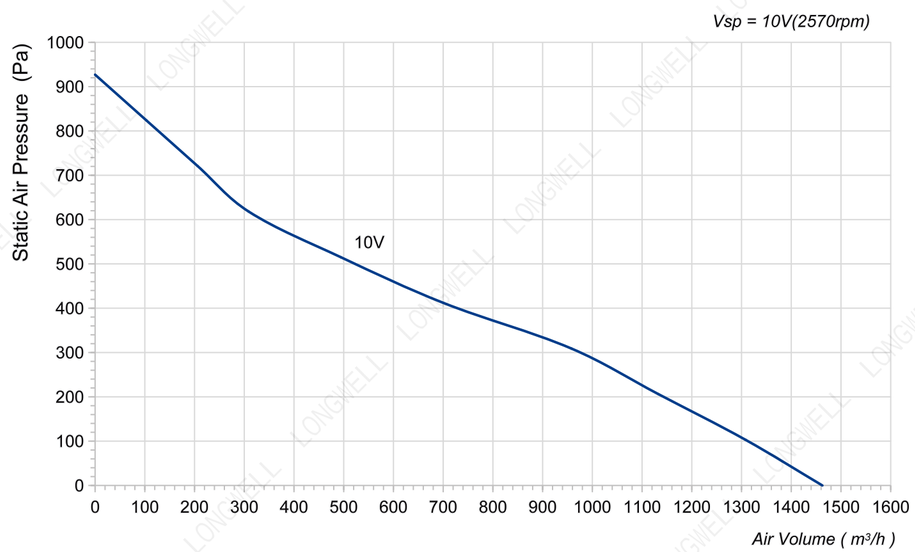

LWBE3G250-072NS-09 (without bracket)

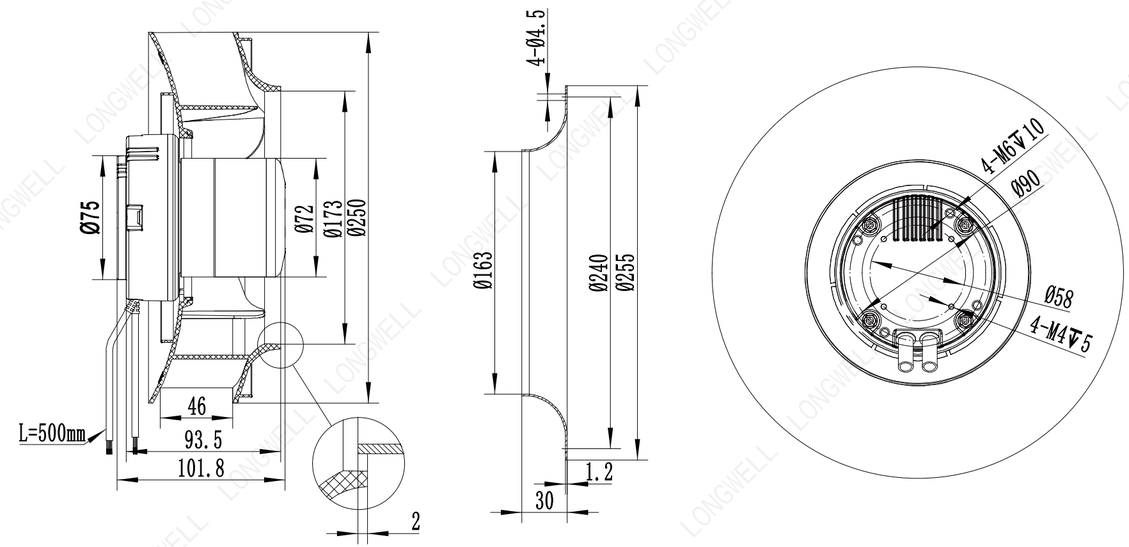

LWBE3G250-072PS-04 (with bracket)

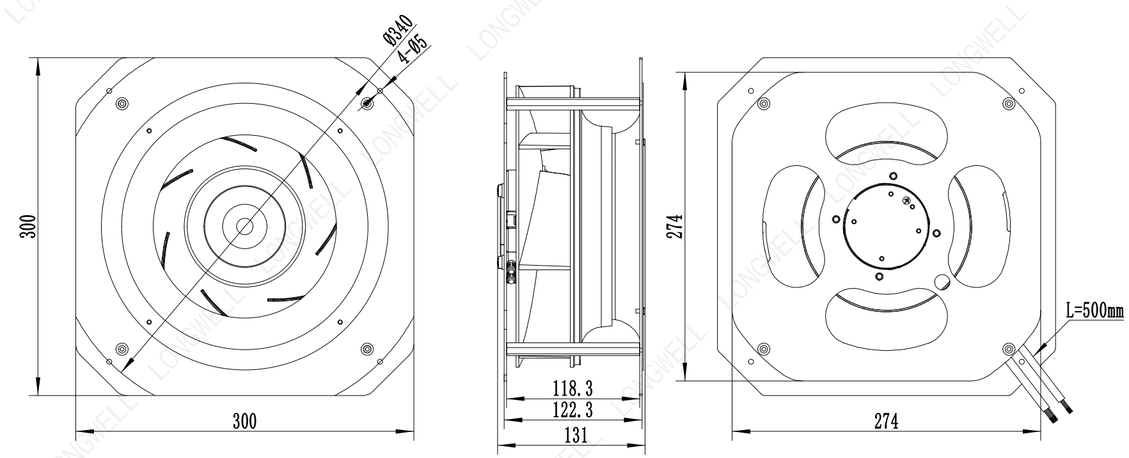

Ningbo Longwell Electric Technology CO, LTD
https://www.longwellfans.com Email:sales@zjlongwell.com

LWBE-250 Series

Product Characteristic

- Impeller Material: PA6+GF
- Supply Voltage: 230V,50/60Hz
- Mode Of Operation: S1
- Protection Class: IP55
- Insulation Class: F
- Operation Temperature: -25℃～+60℃
- Techniacal Feature: Control input 0-10VDC/PWM,Tech output,Locked-Rotor protection,Reverse Polarity Over-voltage protection, Soft Start Protection.

Technical Specifications

Model	Voltage (V)	Input Power (W)	Current (A)	Air Volume (m³/h)	Static Pressure (Pa)	Speed (RPM)	Noise [dB(A)]
LWBE3G250-092PS-05	230	230	1.65	1648	721	2700	71

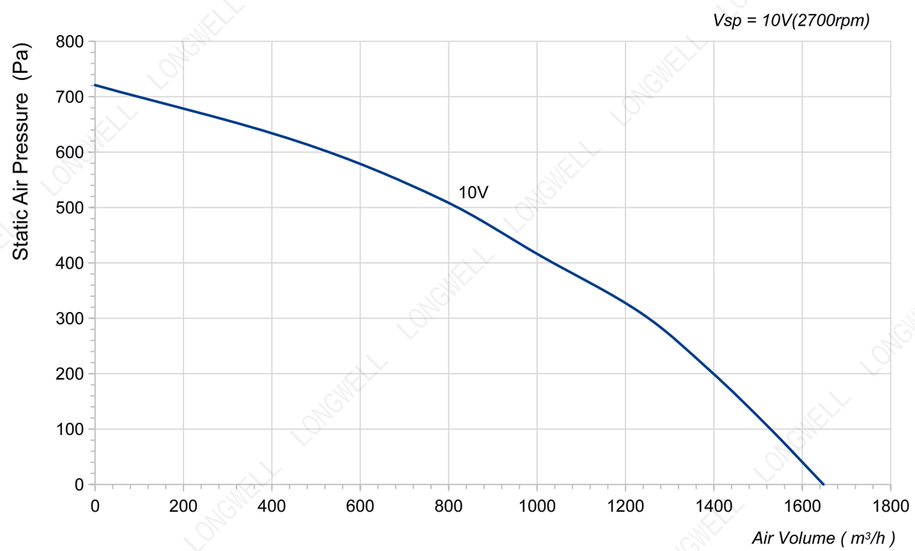

LWBE3G250-092NS-19 (without bracket)

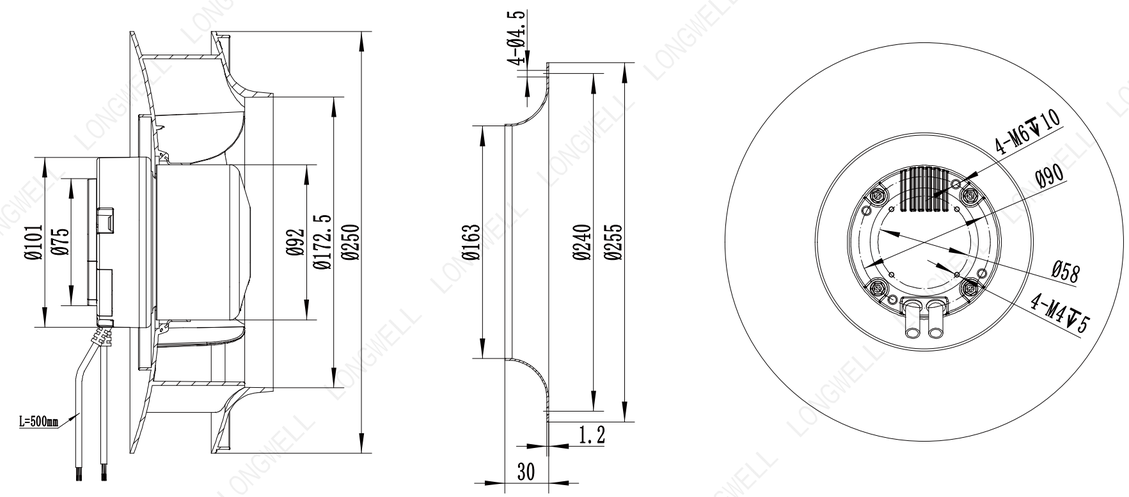

LWBE3G250-092PS-05 (with bracket)

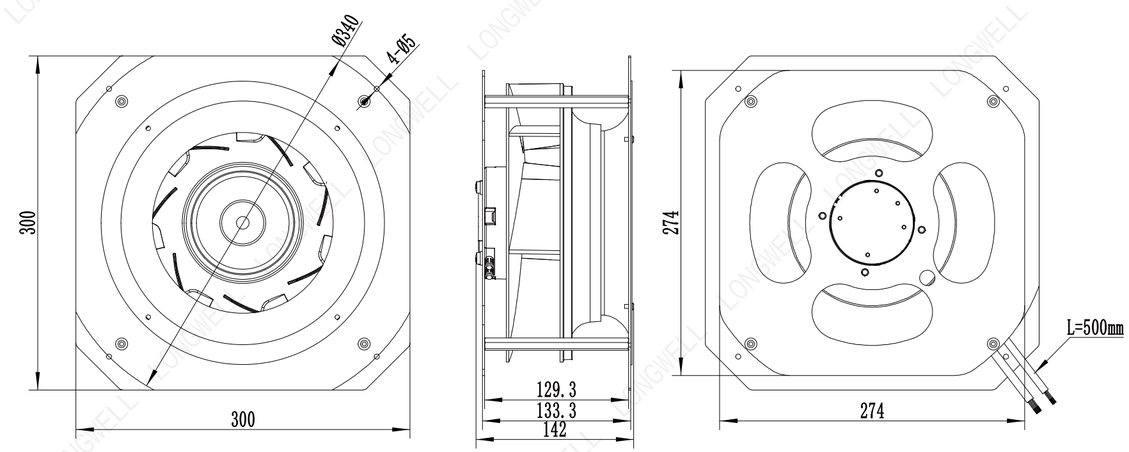

Ningbo Longwell Electric Technology CO, LTD
https://www.longwellfans.com Email:sales@zjlongwell.com

LWBE-250 Series

Product Characteristic

- Impeller Material: Aluminum Alloy
- Supply Voltage: 230V,50/60Hz
- Mode Of Operation: S1
- Protection Class: IP55
- Insulation Class: F
- Operation Temperature: -25℃～+60℃
- Techniacal Feature: Control input 0-10VDC/PWM,Tech output,Locked-Rotor protection,Reverse Polarity Over-voltage protection, Soft Start Protection.

Technical Specifications

Model	Voltage (V)	Input Power (W)	Current (A)	Air Volume (m³/h)	Static Pressure (Pa)	Speed (RPM)	Noise [dB(A)]
LWBE3G250-102PS-06	230	520	2.5	2472	1545	3650	85

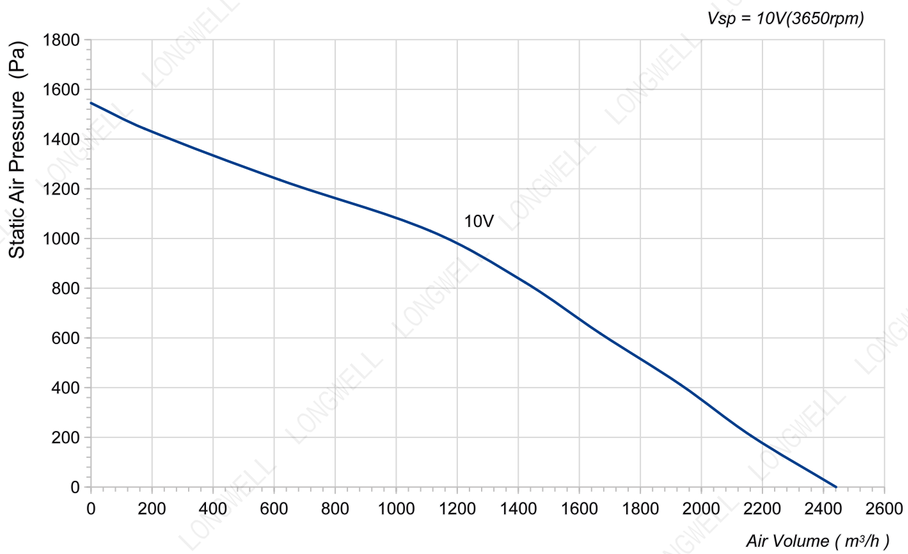

LWBE3G250-102NS-10 (without bracket)

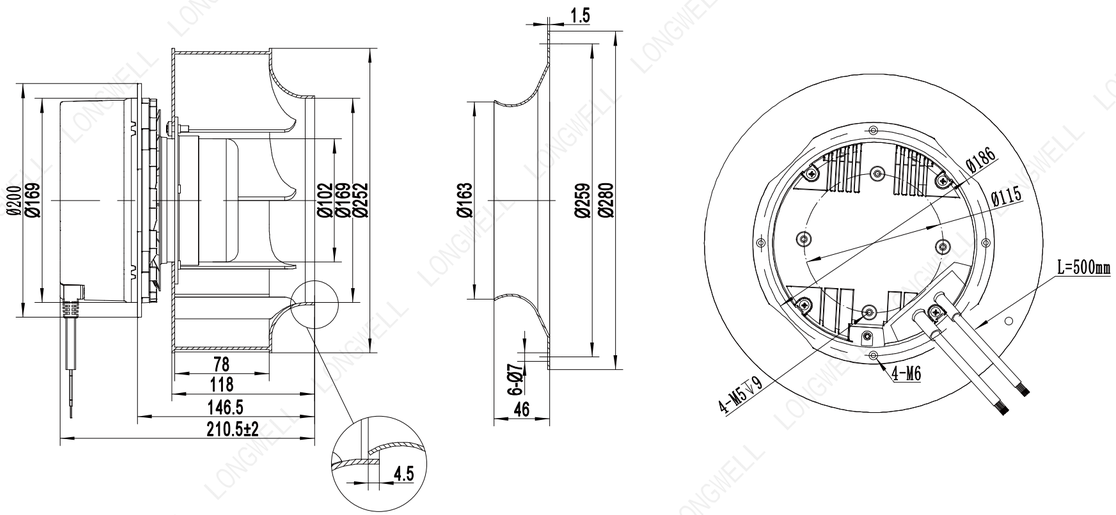

LWBE3G250-102PS-06 (with bracket)

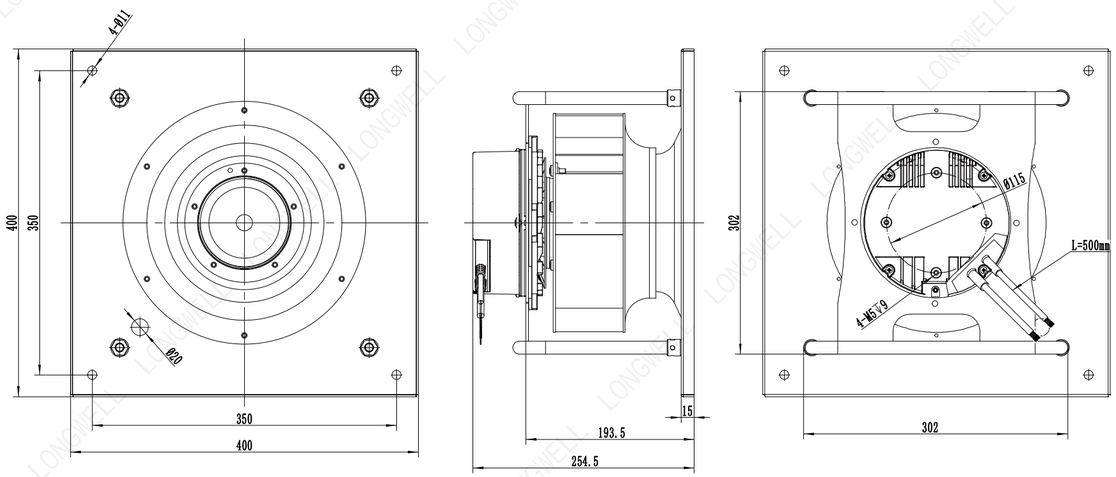

Ningbo Longwell Electric Technology CO, LTD
https://www.longwellfans.com Email:sales@zjlongwell.com

LWBE-250 Series

Product Characteristic

- Impeller Material: Aluminum Alloy
- Supply Voltage: 230V,50/60Hz
- Mode Of Operation: S1
- Protection Class: IP55
- Insulation Class: F
- Operation Temperature: -25℃～+60℃
- Techniacal Feature: Control input 0-10VDC/PWM,Tech output,Locked-Rotor protection,Reverse Polarity Over-voltage protection, Soft Start Protection.

Technical Specifications

Model	Voltage (V)	Input Power (W)	Current (A)	Air Volume (m³/h)	Static Pressure (Pa)	Speed (RPM)	Noise [dB(A)]
LWBE3G250-102PS-07	230	750	3.4	3039	1442	4100	93

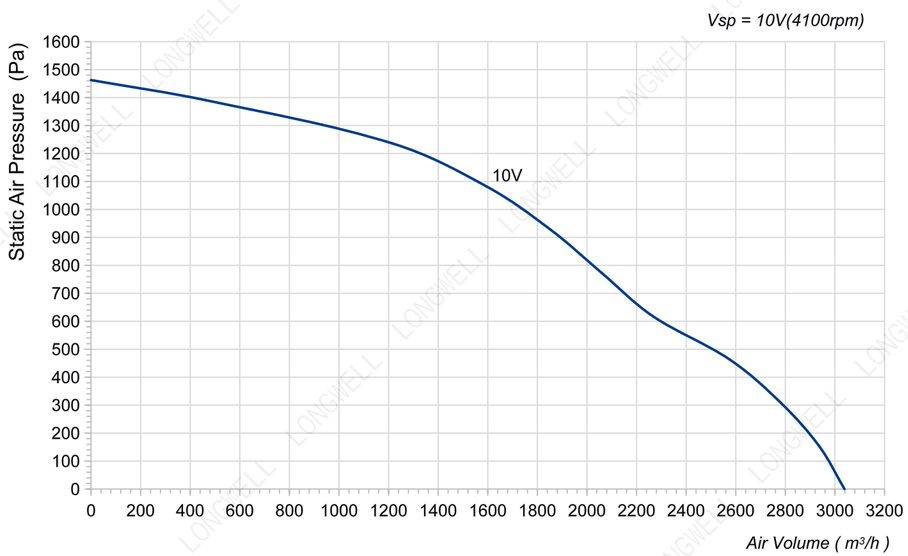

LWBE3G250-102NS-20 (without bracket)

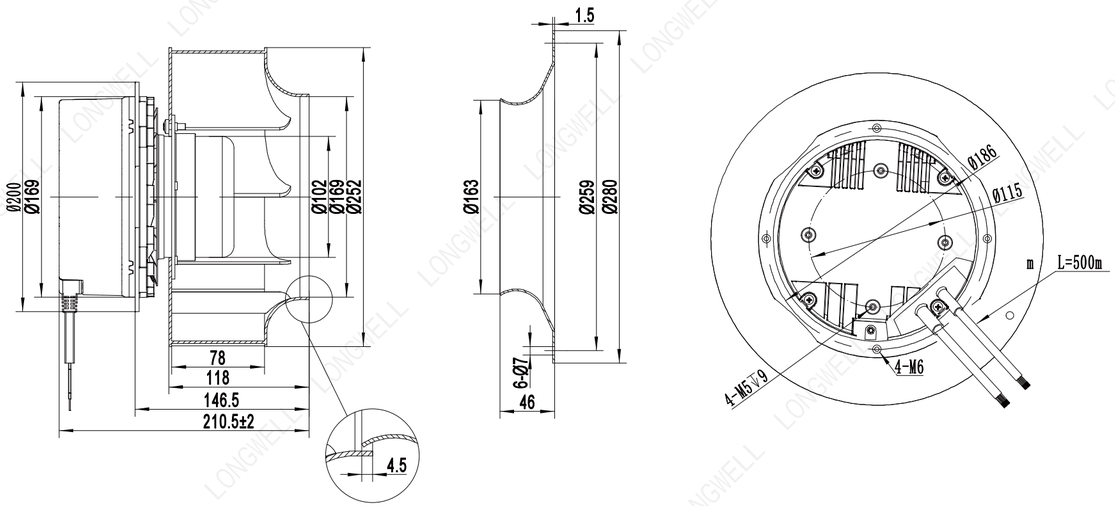

LWBE3G250-102PS-07 (with bracket)

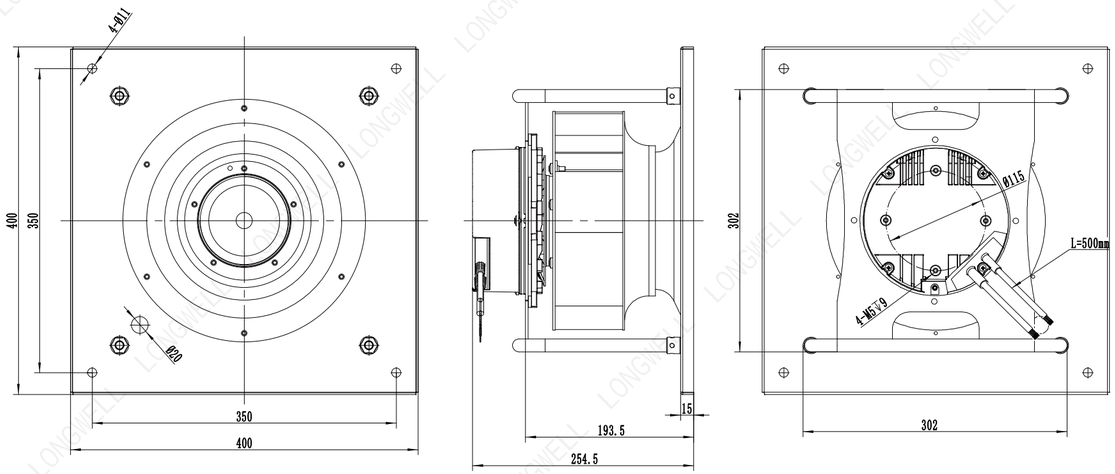

Ningbo Longwell Electric Technology CO, LTD
https://www.longwellfans.com Email:sales@zjlongwell.com

LWBE-250 Series

Product Characteristic

- Impeller Material: Aluminum Alloy
- Supply Voltage: 400V,50/60Hz
- Mode Of Operation: S1
- Protection Class: IP55
- Insulation Class: F
- Operation Temperature: -25℃～+60℃
- Techniacal Feature: Control input 0-10VDC/PWM,Tech output,Locked-Rotor protection,Reverse Polarity Over-voltage protection, Soft Start Protection.

Technical Specifications

Model	Voltage (V)	Input Power (W)	Current (A)	Air Volume (m³/h)	Static Pressure (Pa)	Speed (RPM)	Noise [dB(A)]
LWBE3G250-102PS-08	400	1000	1.6	3708	1751	3860	92

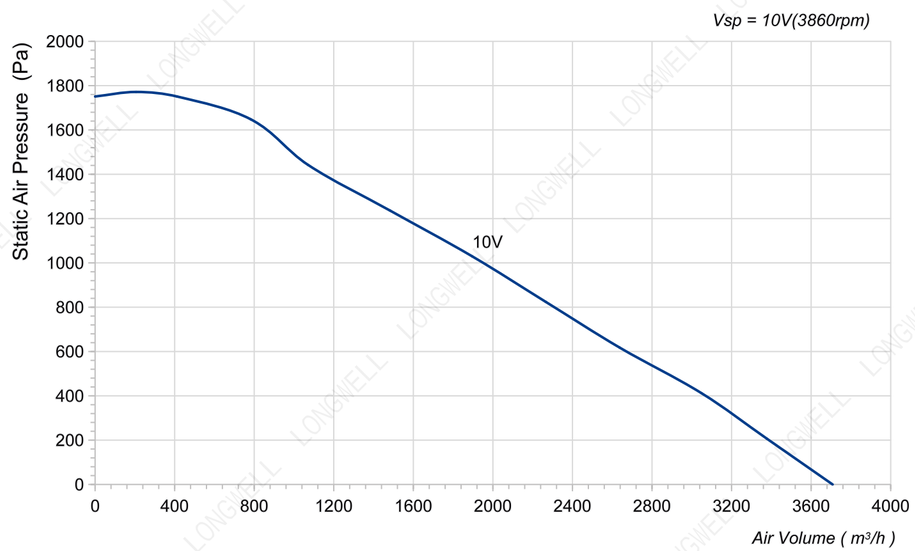

LWBE3G250-102NS-21 (without bracket)

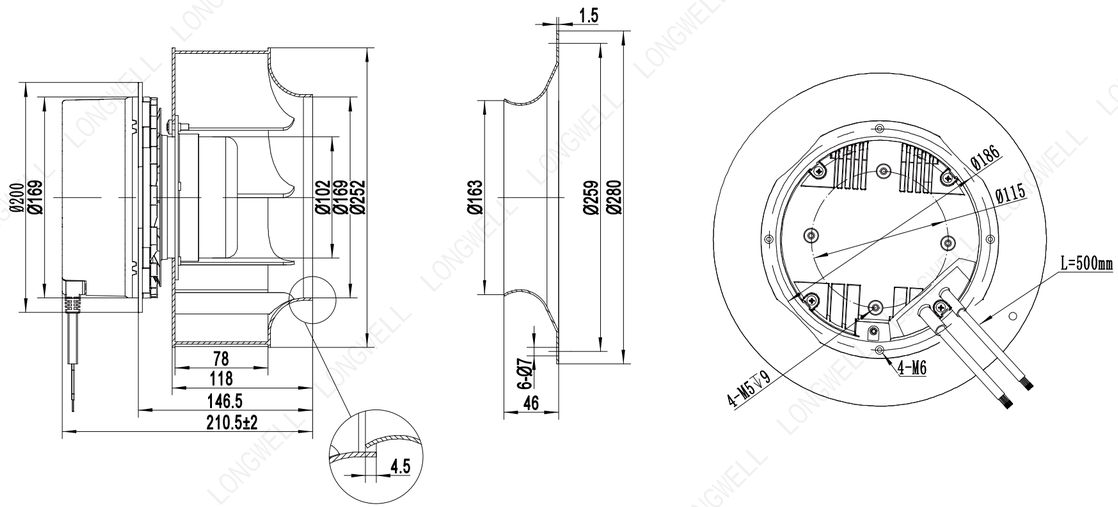

LWBE3G250-102PS-08 (with bracket)

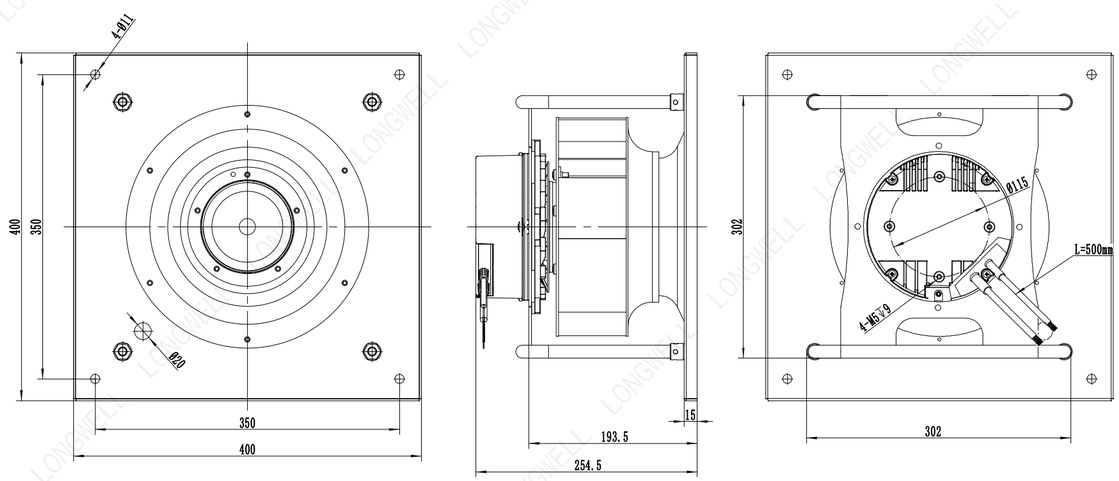

Ningbo Longwell Electric Technology CO, LTD
https://www.longwellfans.com Email:sales@zjlongwell.com

LWBE-280 Series

Product Characteristic

- Impeller Material: Aluminum Alloy
- Supply Voltage: 230V,50/60Hz
- Mode Of Operation: S1
- Protection Class: IP55
- Insulation Class: F
- Operation Temperature: -25℃～+60℃
- Techniacal Feature: Control input 0-10VDC/PWM,Tech output,Locked-Rotor protection,Reverse Polarity Over-voltage protection, Soft Start Protection.

Technical Specifications

Model	Voltage (V)	Input Power (W)	Current (A)	Air Volume (m³/h)	Static Pressure (Pa)	Speed (RPM)	Noise [dB(A)]
LWBE3G280-072PS-01	230	170	1.2	2318	556	1910	73

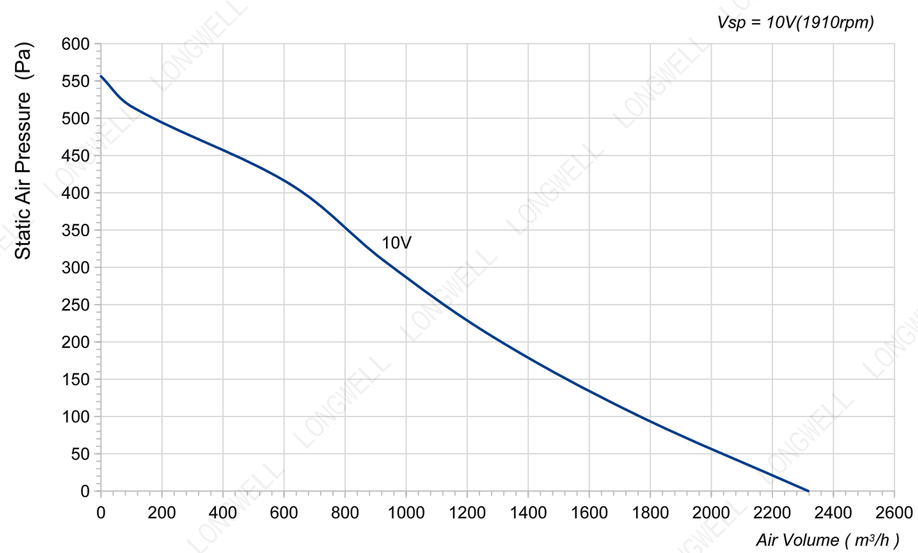

LWBE3G280-072NS-12 (without bracket)

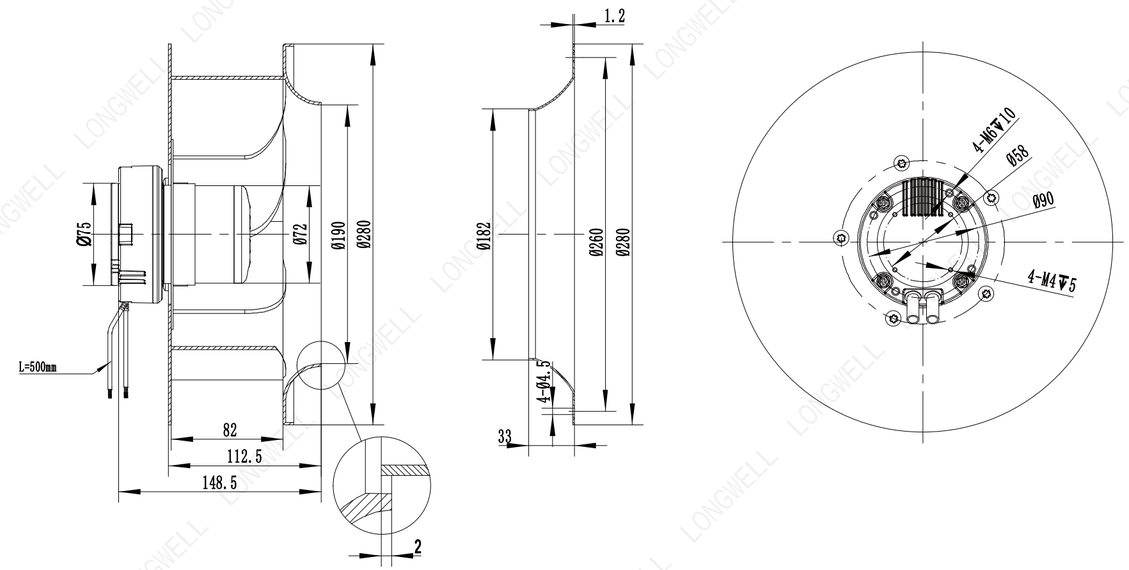

LWBE3G280-072PS-01 (with bracket)

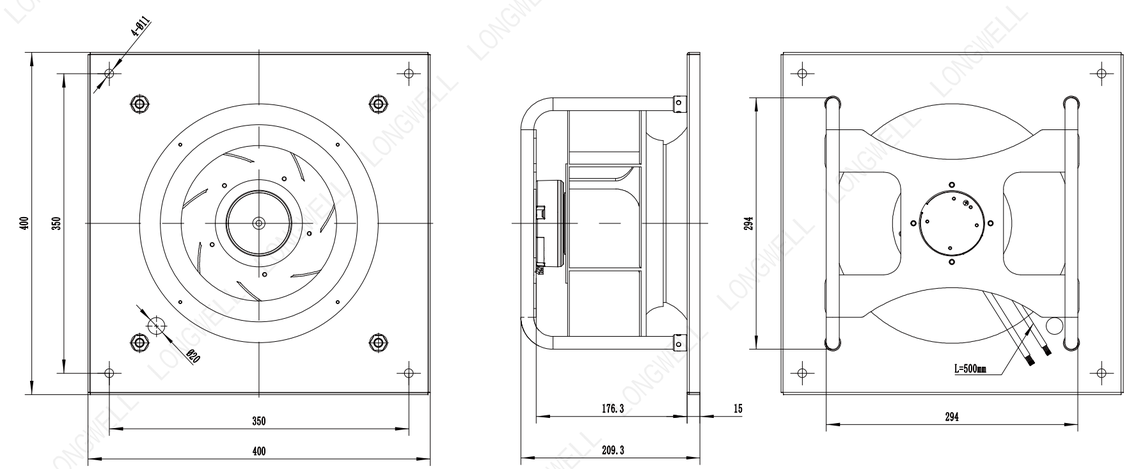

Ningbo Longwell Electric Technology CO, LTD
https://www.longwellfans.com Email:sales@zjlongwell.com

LWBE-280 Series

Product Characteristic

- Impeller Material: Aluminum Alloy
- Supply Voltage: 230V,50/60Hz
- Mode Of Operation: S1
- Protection Class: IP55
- Insulation Class: F
- Operation Temperature: -25℃～+60℃
- Techniacal Feature: Control input 0-10VDC/PWM,Tech output,Locked-Rotor protection,Reverse Polarity Over-voltage protection, Soft Start Protection.

Technical Specifications

Model	Voltage (V)	Input Power (W)	Current (A)	Air Volume (m³/h)	Static Pressure (Pa)	Speed (RPM)	Noise [dB(A)]
LWBE3G280-092PS-03	230	225	1.6	2009	803	2650	70

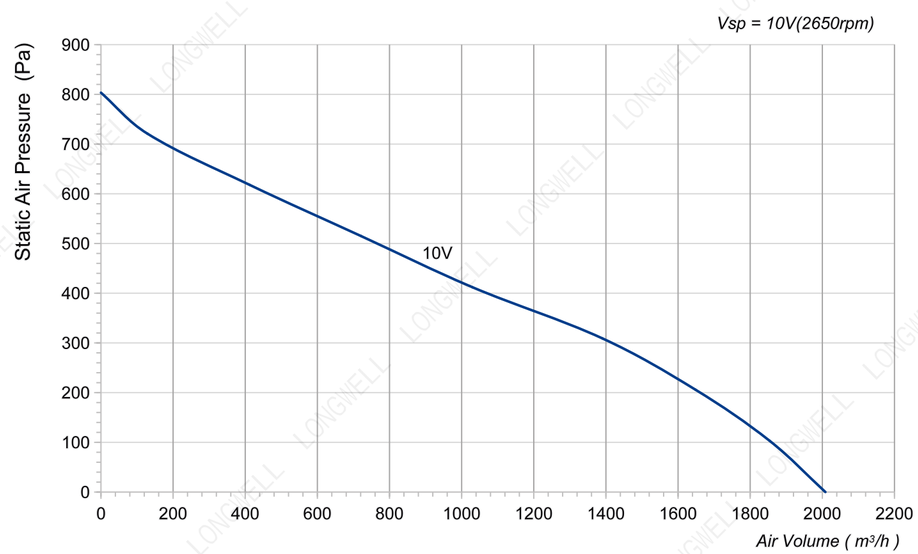

LWBE3G280-092NS-11 (without bracket)

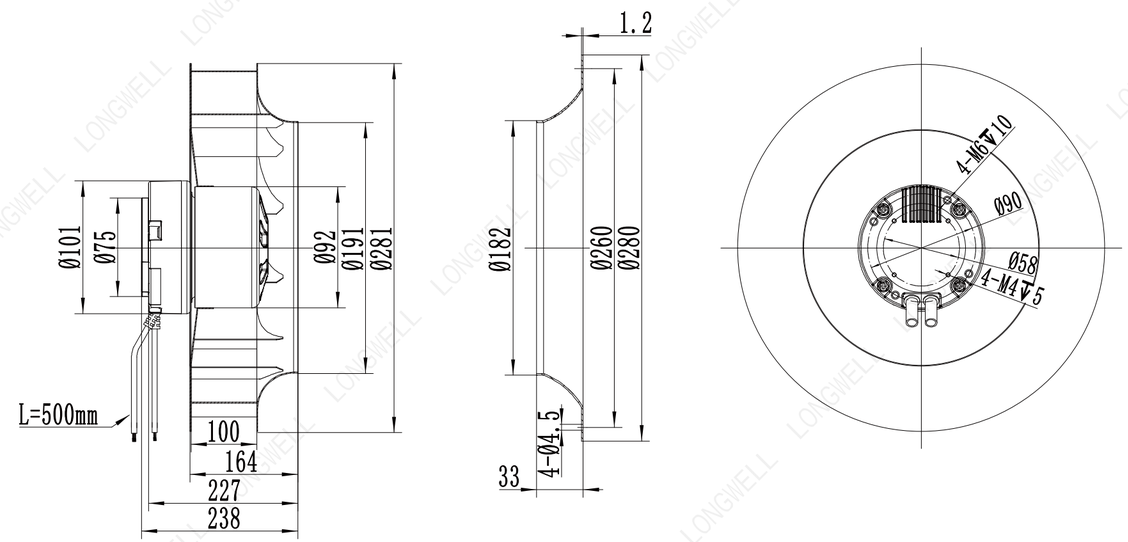

LWBE3G280-092PS-03 (with bracket)

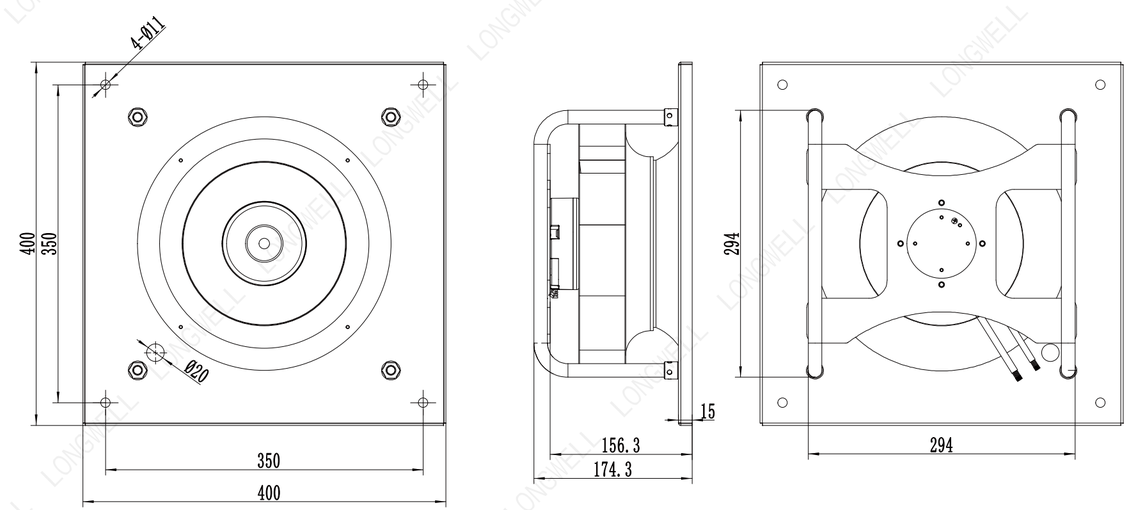

Ningbo Longwell Electric Technology CO, LTD
https://www.longwellfans.com Email:sales@zjlongwell.com

LWBE-280 Series

Product Characteristic

- Impeller Material: Aluminum Alloy
- Supply Voltage: 230V,50/60Hz
- Mode Of Operation: S1
- Protection Class: IP55
- Insulation Class: F
- Operation Temperature: -25℃～+60℃
- Techniacal Feature: Control input 0-10VDC/PWM,Tech output,Locked-Rotor protection,Reverse Polarity Over-voltage protection, Soft Start Protection.

Technical Specifications

Model	Voltage (V)	Input Power (W)	Current (A)	Air Volume (m³/h)	Static Pressure (Pa)	Speed (RPM)	Noise [dB(A)]
LWBE3G280-102PS-07	230	500	2.3	3193	1442	3000	75

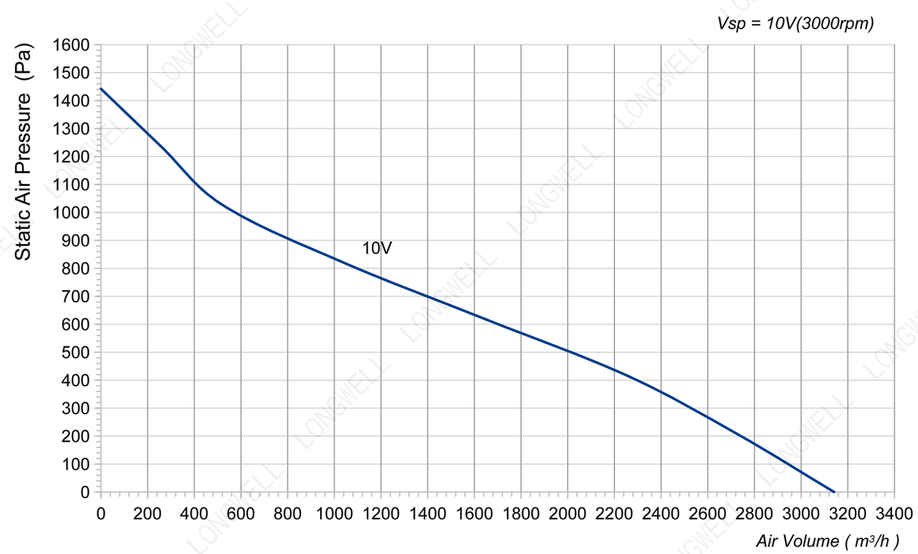

LWBE3G280-102NS-16 (without bracket)

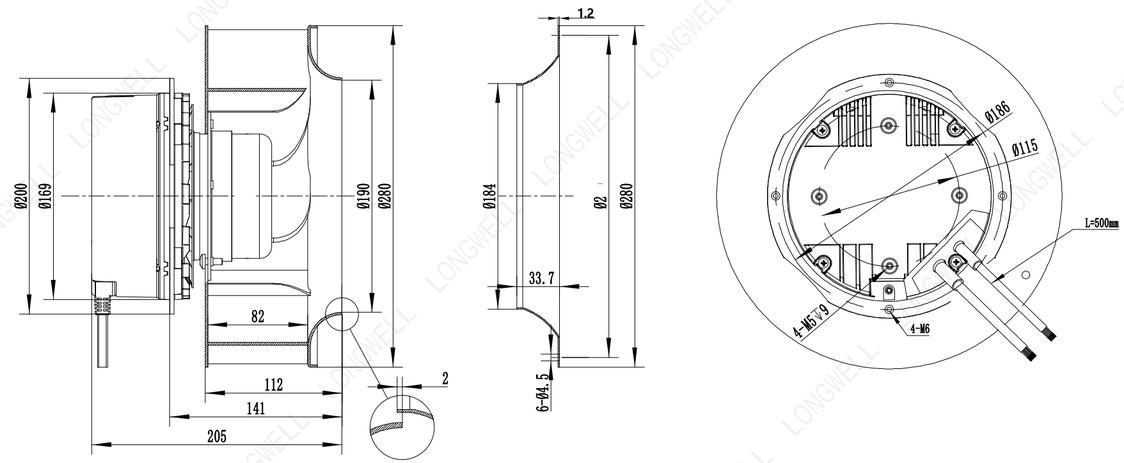

LWBE3G280-102PS-07 (with bracket)

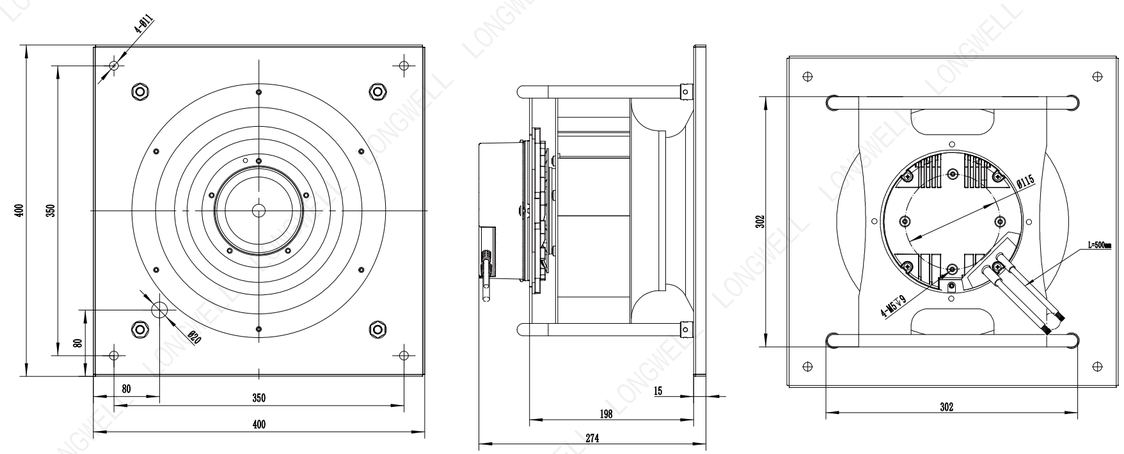

Ningbo Longwell Electric Technology CO, LTD
https://www.longwellfans.com Email:sales@zjlongwell.com

LWBE-280 Series

Product Characteristic

- Impeller Material: Aluminum Alloy
- Supply Voltage: 230V,50/60Hz
- Mode Of Operation: S1
- Protection Class: IP55
- Insulation Class: F
- Operation Temperature: -25℃～+60℃
- Techniacal Feature: Control input 0-10VDC/PWM,Tech output,Locked-Rotor protection,Reverse Polarity Over-voltage protection, Soft Start Protection.

Technical Specifications

Model	Voltage (V)	Input Power (W)	Current (A)	Air Volume (m³/h)	Static Pressure (Pa)	Speed (RPM)	Noise [dB(A)]
LWBE3G280-102PS-04	230	700	3.1	3863	1133	3270	85

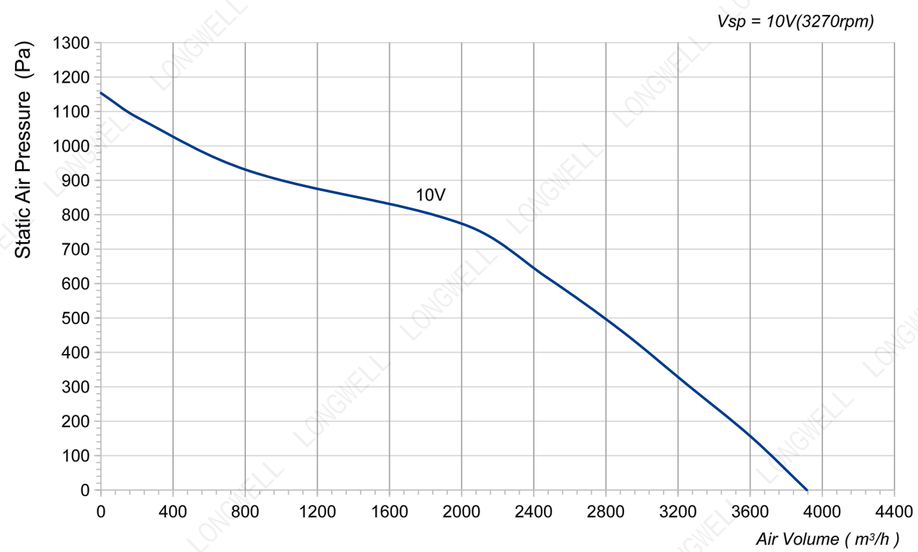

LWBE3G280-102NS-06 (without bracket)

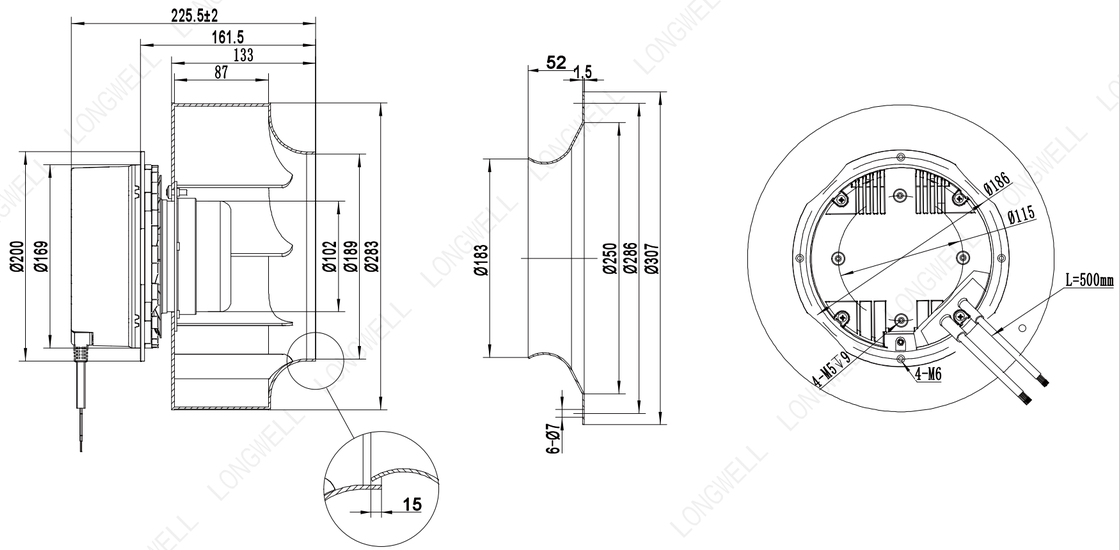

LWBE3G280-102PS-04 (with bracket)

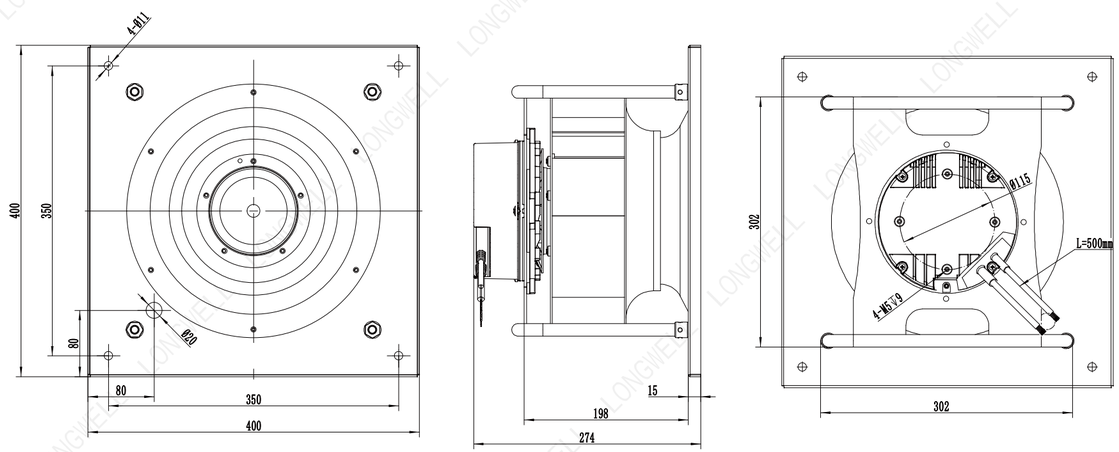

Ningbo Longwell Electric Technology CO, LTD
https://www.longwellfans.com Email:sales@zjlongwell.com

LWBE-280 Series

Product Characteristic

- Impeller Material: Aluminum Alloy
- Supply Voltage: 400V,50/60Hz
- Mode Of Operation: S1
- Protection Class: IP55
- Insulation Class: F
- Operation Temperature: -25℃～+60℃
- Techniacal Feature: Control input 0-10VDC/PWM,Tech output,Locked-Rotor protection,Reverse Polarity Over-voltage protection, Soft Start Protection.

Technical Specifications

Model	Voltage (V)	Input Power (W)	Current (A)	Air Volume (m³/h)	Static Pressure (Pa)	Speed (RPM)	Noise [dB(A)]
LWBE3G280-102PT-08	400	1100	1.7	4378	1751	3370	78

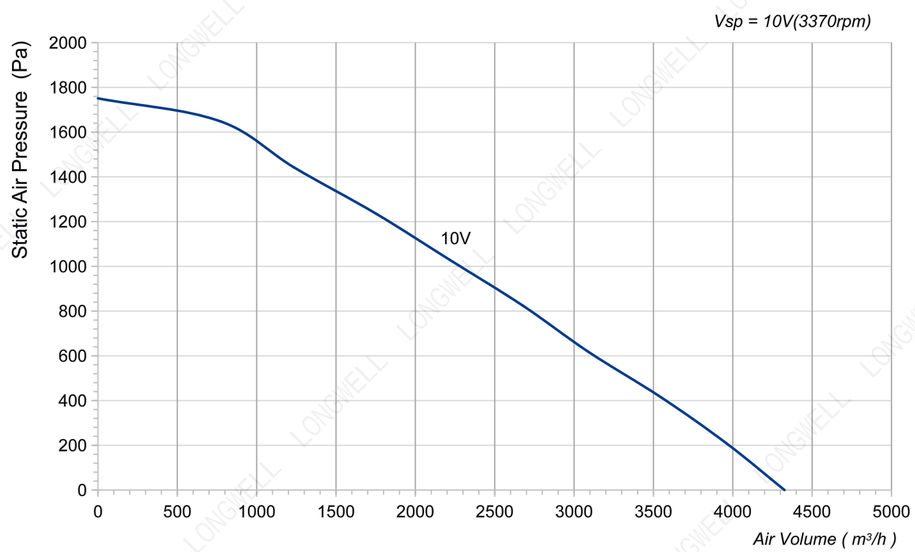

LWBE3G280-102NT-17 (without bracket)

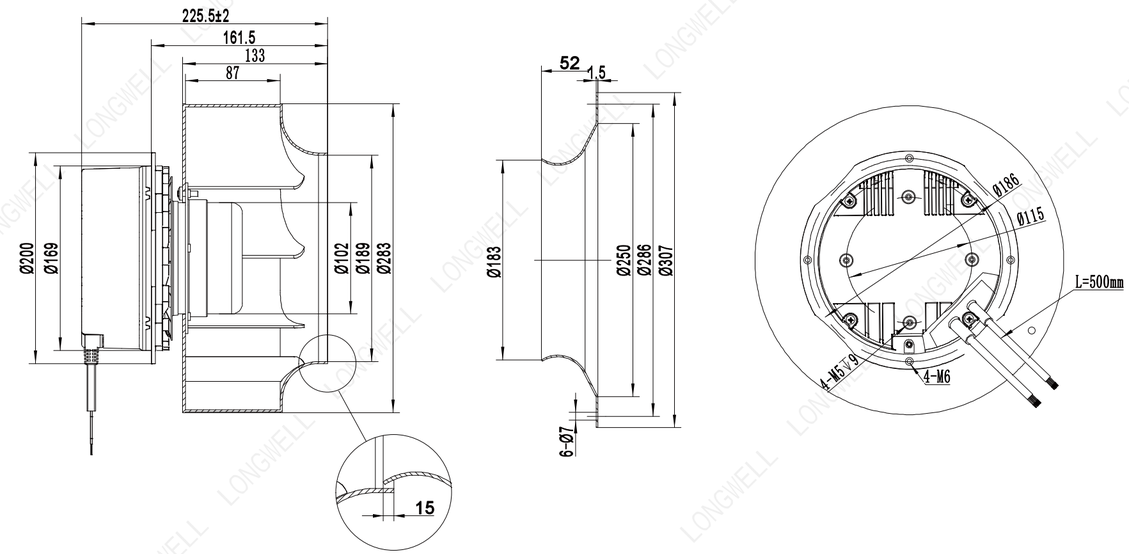

LWBE3G280-102PT-08 (with bracket)

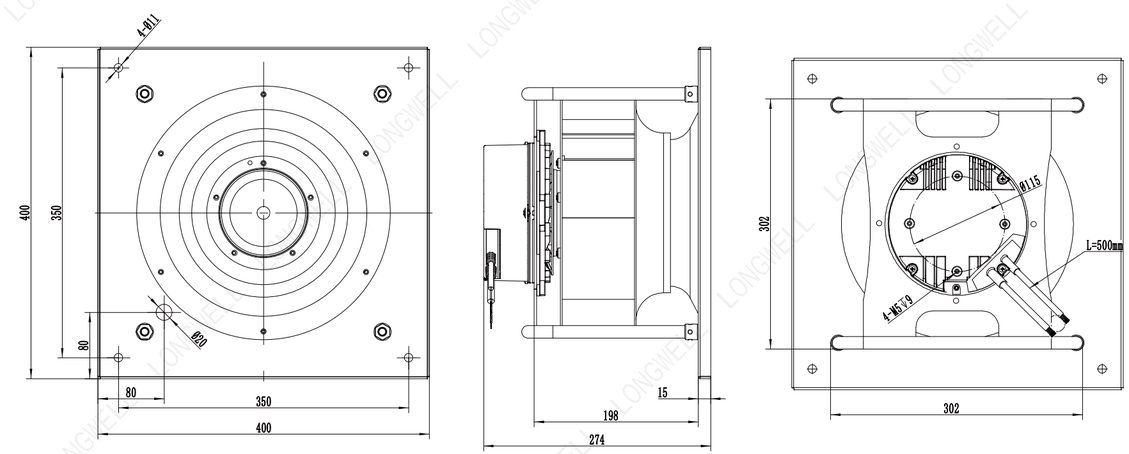

Ningbo Longwell Electric Technology CO, LTD
https://www.longwellfans.com Email:sales@zjlongwell.com

LWBE-280 Series

Product Characteristic

- Impeller Material: Aluminum Alloy
- Supply Voltage: 400V,50/60Hz
- Mode Of Operation: S1
- Protection Class: IP54
- Insulation Class: F
- Operation Temperature: -25℃～+60℃
- Techniacal Feature: Control input 0-10VDC/PWM,Tech output,Locked-Rotor protection,Reverse Polarity Over-voltage protection, Soft Start Protection.

Technical Specifications

Model	Voltage (V)	Input Power (W)	Current (A)	Air Volume (m³/h)	Static Pressure (Pa)	Speed (RPM)	Noise [dB(A)]
LWBE3G280-138PT-05	400	860	1.22	3028	886	3000	85

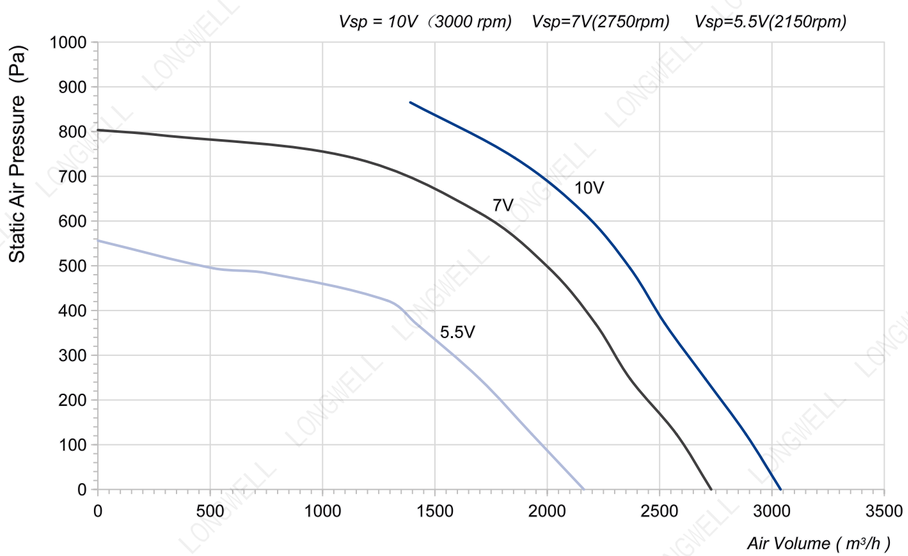

LWBE3G280-138NT-03 (without bracket)

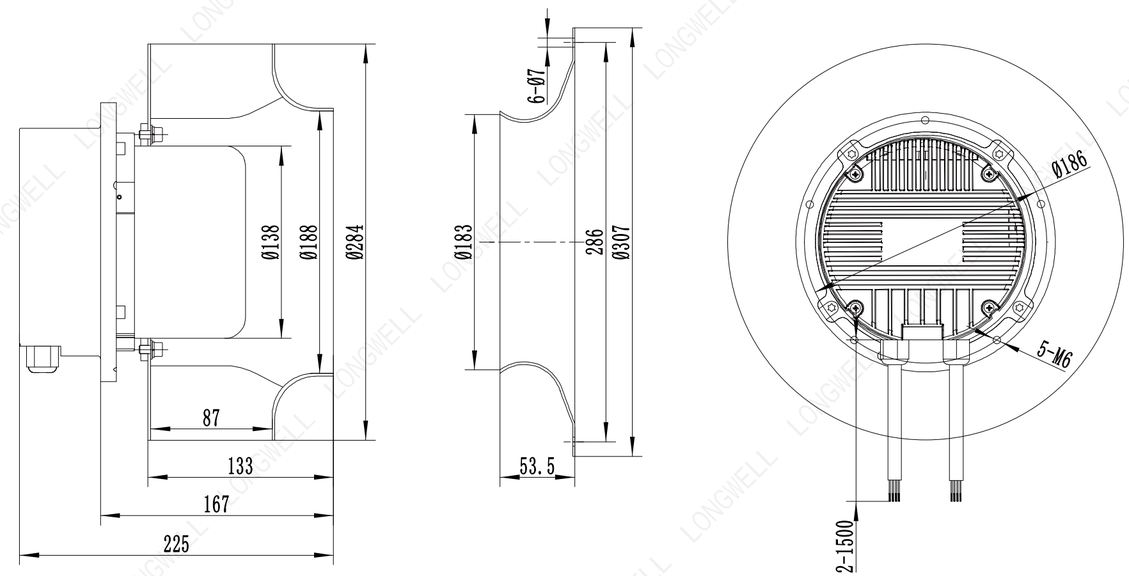

LWBE3G280-138PT-05 (with bracket)

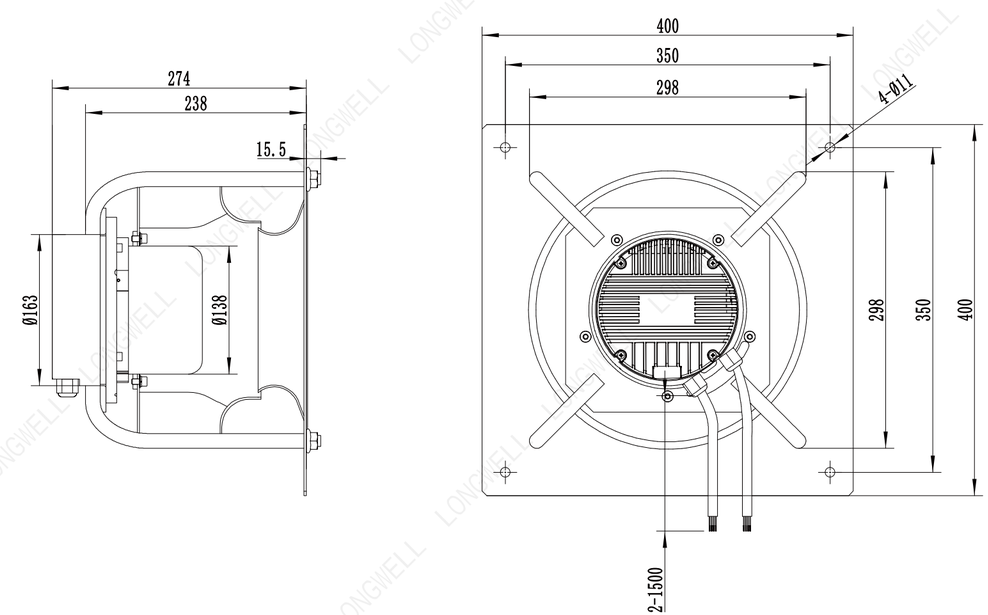

Ningbo Longwell Electric Technology CO, LTD
https://www.longwellfans.com Email:sales@zjlongwell.com

LWBE-280 Series

Product Characteristic

- Impeller Material: Aluminum Alloy
- Supply Voltage: 400V,50/60Hz
- Mode Of Operation: S1
- Protection Class: IP54
- Insulation Class: F
- Operation Temperature: -25℃～+60℃
- Techniacal Feature: Control input 0-10VDC/PWM,Tech output,Locked-Rotor protection,Reverse Polarity Over-voltage protection, Soft Start Protection.

Technical Specifications

Model	Voltage (V)	Input Power (W)	Current (A)	Air Volume (m³/h)	Static Pressure (Pa)	Speed (RPM)	Noise [dB(A)]
LWBE3G280-138PT-06	400	1355	1.9	3790	1421	3500	89

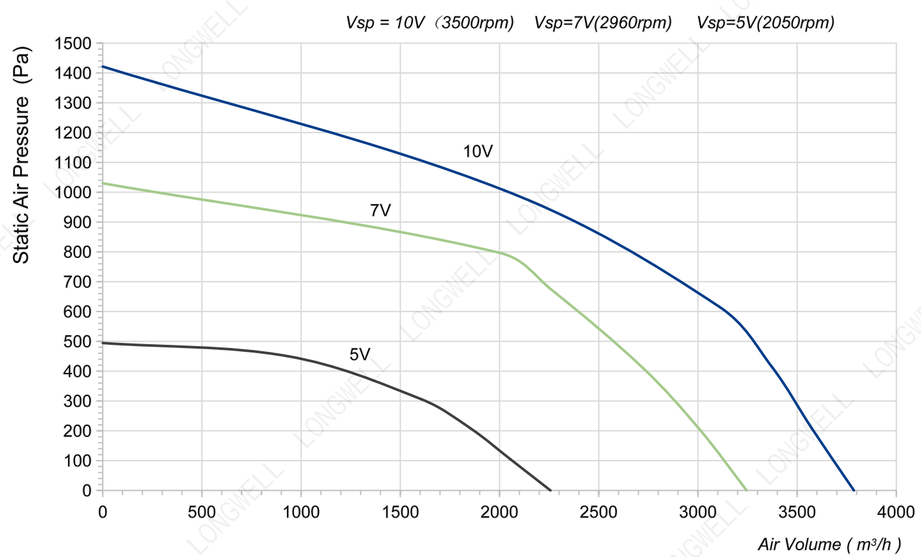

LWBE3G280-138NT-18 (without bracket)

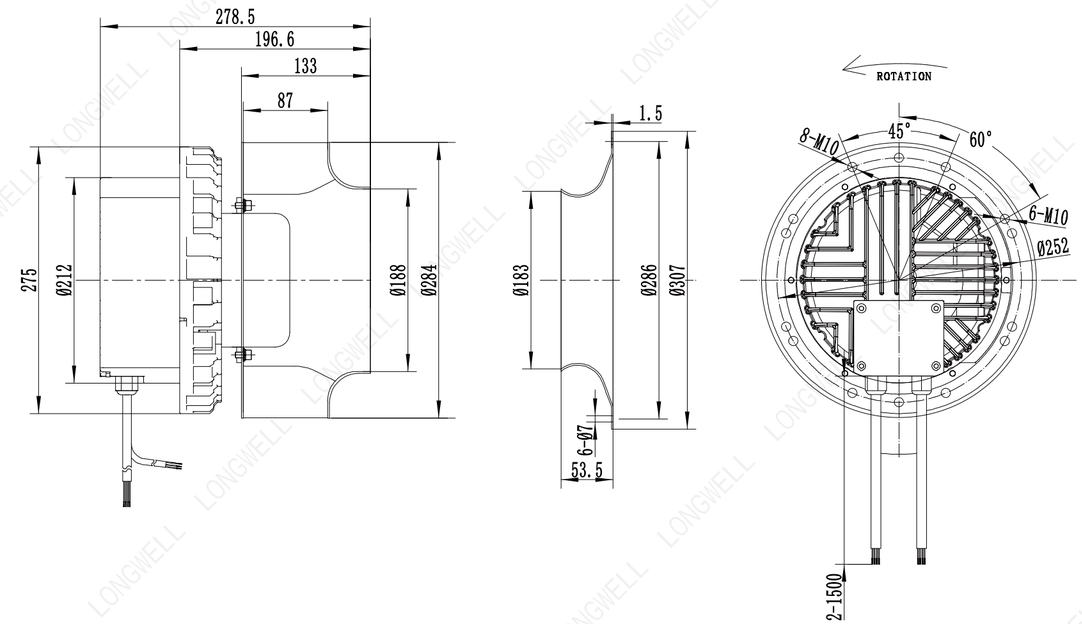

LWBE3G280-138PT-06 (with bracket)

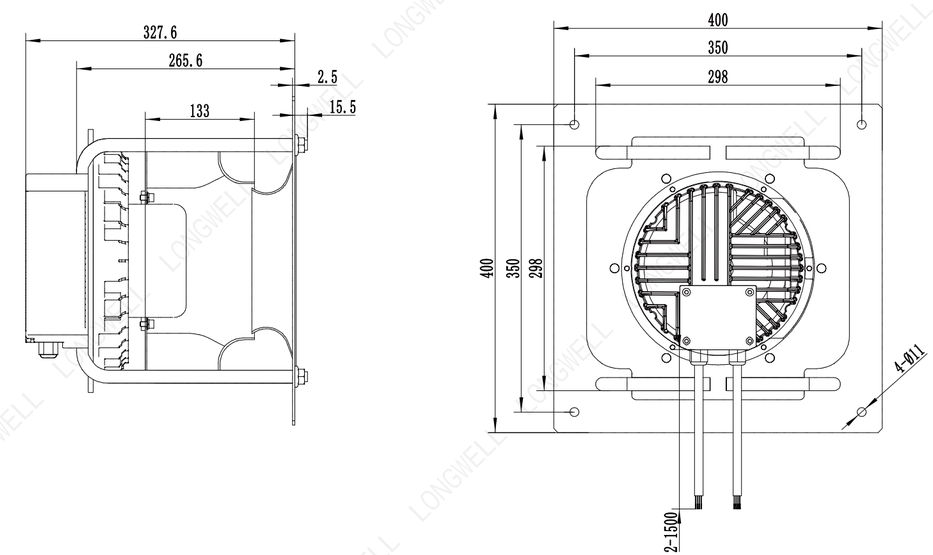

Ningbo Longwell Electric Technology CO, LTD
https://www.longwellfans.com Email:sales@zjlongwell.com

LWBE-310 Series

Product Characteristic

- Impeller Material: Aluminum Alloy
- Supply Voltage: 230V,50/60Hz
- Mode Of Operation: S1
- Protection Class: IP55
- Insulation Class: F
- Operation Temperature: -25℃～+60℃
- Techniacal Feature: Control input 0-10VDC/PWM,Tech output,Locked-Rotor protection,Reverse Polarity Over-voltage protection, Soft Start Protection.

Technical Specifications

Model	Voltage (V)	Input Power (W)	Current (A)	Air Volume (m³/h)	Static Pressure (Pa)	Speed (RPM)	Noise [dB(A)]
LWBE3G310-072PS-01	230	175	1.25	2266	700	1810	66

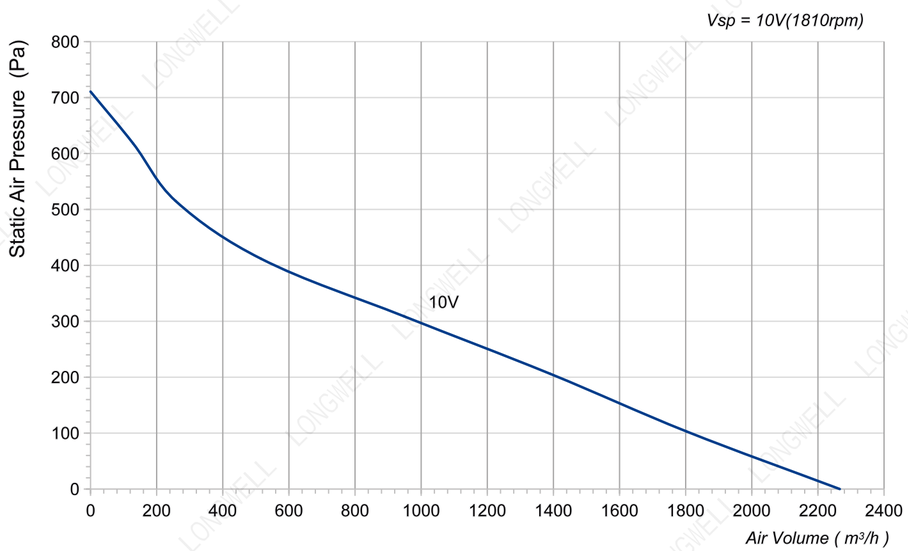

LWBE3G310-072NS-07 (without bracket)

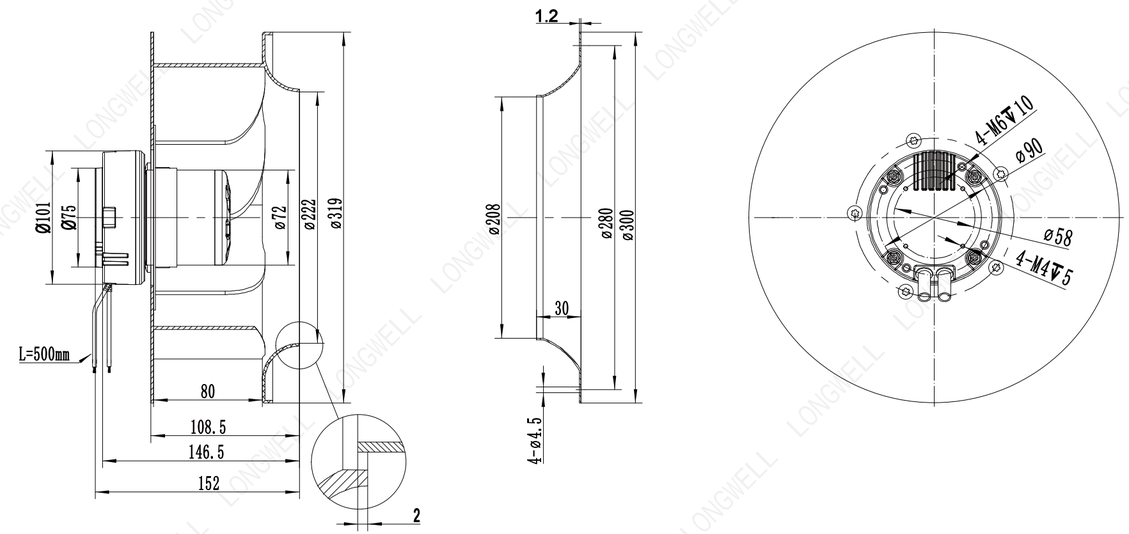

LWBE3G310-072PS-01 (with bracket)

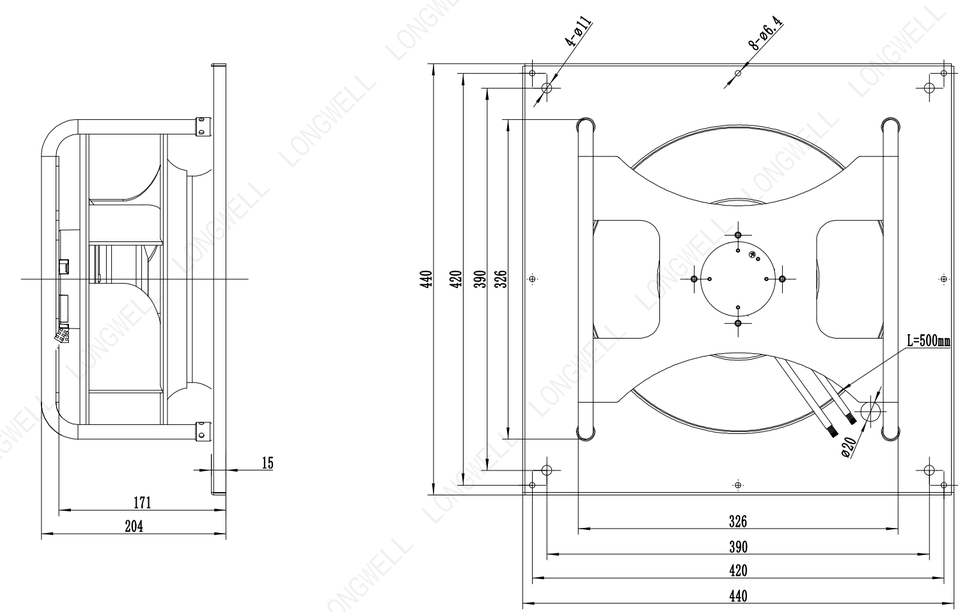

Ningbo Longwell Electric Technology CO, LTD
https://www.longwellfans.com Email:sales@zjlongwell.com

LWBE-310 Series

Product Characteristic

- Impeller Material: Aluminum Alloy
- Supply Voltage: 230V,50/60Hz
- Mode Of Operation: S1
- Protection Class: IP55
- Insulation Class: F
- Operation Temperature: -25℃～+60℃
- Techniacal Feature: Control input 0-10VDC/PWM,Tech output,Locked-Rotor protection,Reverse Polarity Over-voltage protection, Soft Start Protection.

Technical Specifications

Model	Voltage (V)	Input Power (W)	Current (A)	Air Volume (m³/h)	Static Pressure (Pa)	Speed (RPM)	Noise [dB(A)]
LWBE3G310-072PS-06	230	175	1.25	2266	618	1710	72

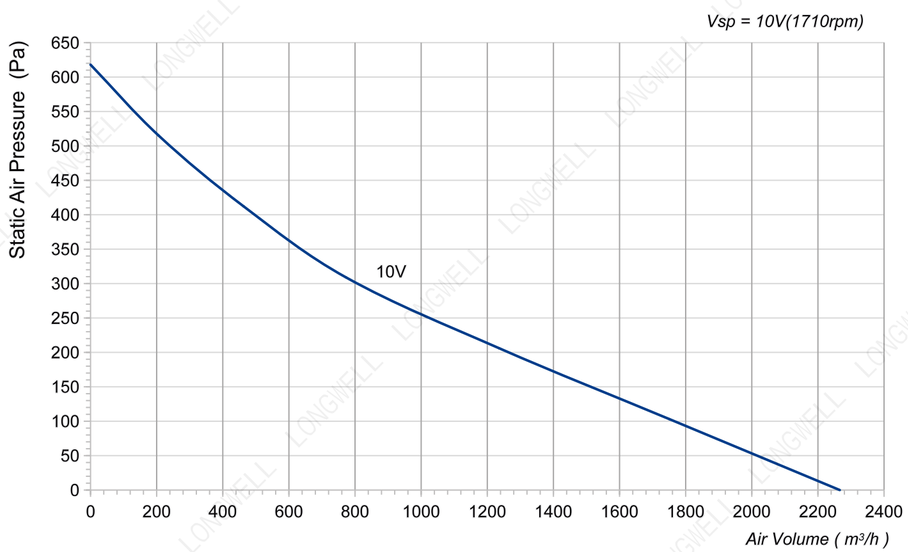

LWBE3G310-072NS-21 (without bracket)

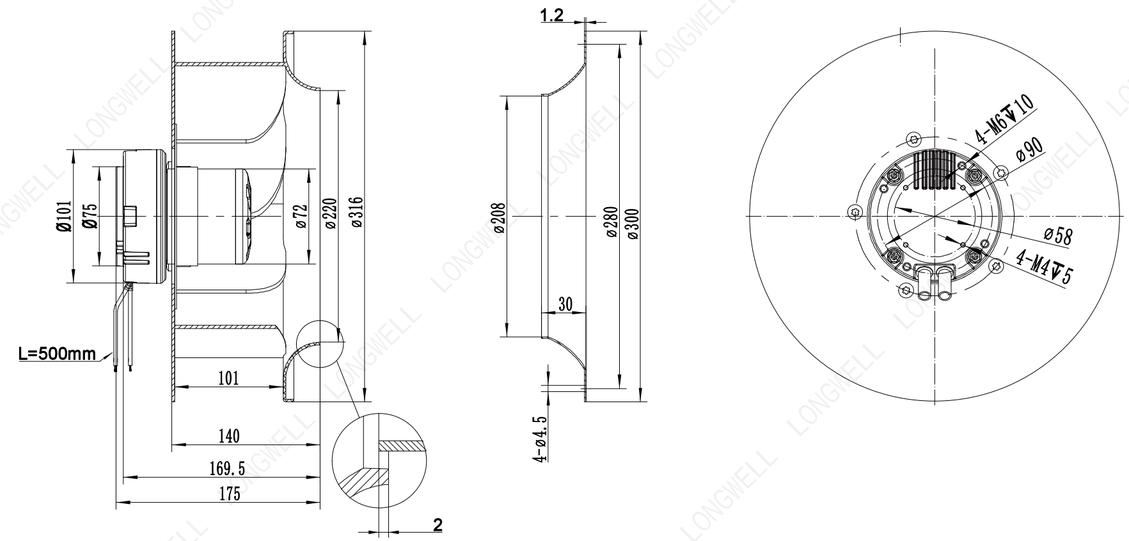

LWBE3G310-072PS-06 (with bracket)

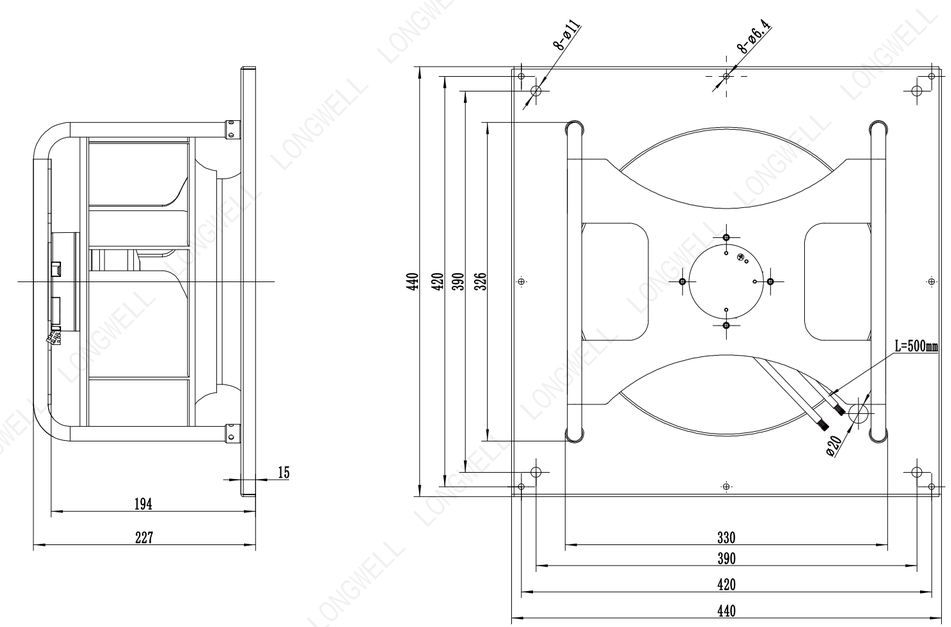

Ningbo Longwell Electric Technology CO, LTD
https://www.longwellfans.com Email:sales@zjlongwell.com

LWBE-310 Series

Product Characteristic

- Impeller Material: Aluminum Alloy
- Supply Voltage: 230V,50/60Hz
- Mode Of Operation: S1
- Protection Class: IP55
- Insulation Class: F
- Operation Temperature: -25℃～+60℃
- Techniacal Feature: Control input 0-10VDC/PWM,Tech output,Locked-Rotor protection,Reverse Polarity Over-voltage protection, Soft Start Protection.

Technical Specifications

Model	Voltage (V)	Input Power (W)	Current (A)	Air Volume (m³/h)	Static Pressure (Pa)	Speed (RPM)	Noise [dB(A)]
LWBE3G310-092PS-07	230	175	1.3	2678	608	1500	63

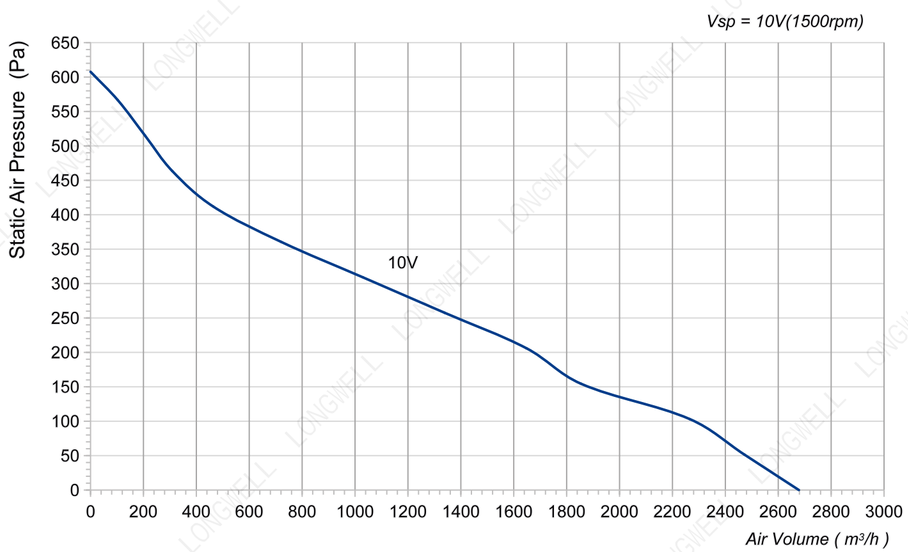

LWBE3G310-092NS-22 (without bracket)

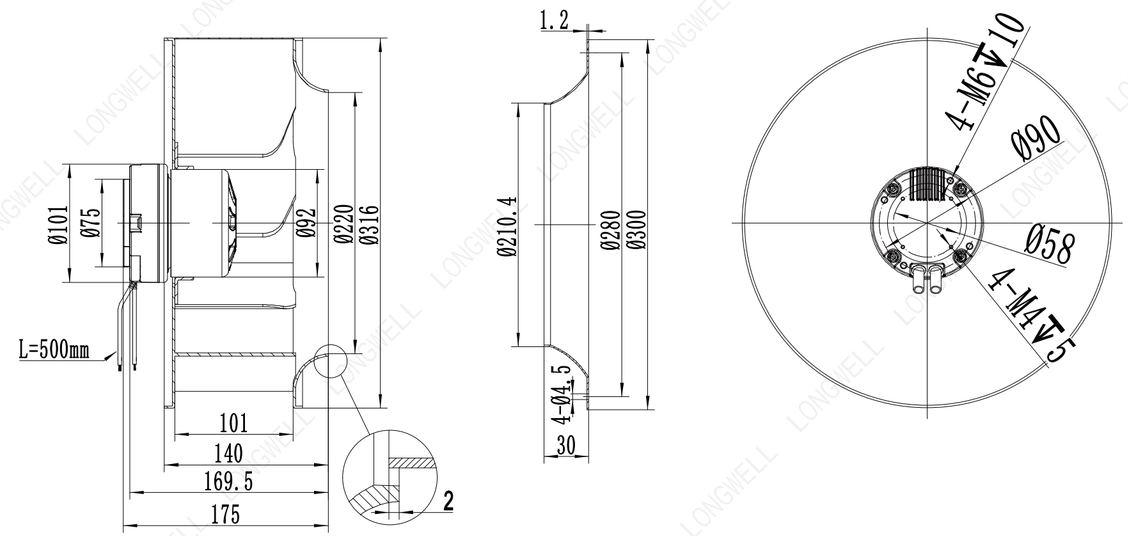

LWBE3G310-092PS-07 (with bracket)

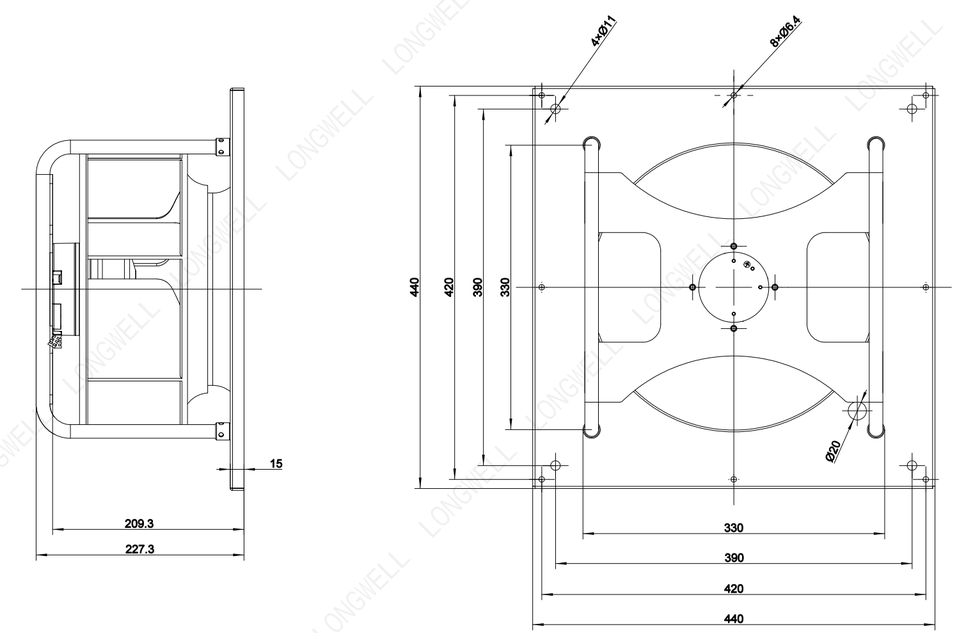

Ningbo Longwell Electric Technology CO, LTD
https://www.longwellfans.com Email:sales@zjlongwell.com

LWBE-310 Series

Product Characteristic

- Impeller Material: Aluminum Alloy
- Supply Voltage: 230V,50/60Hz
- Mode Of Operation: S1
- Protection Class: IP55
- Insulation Class: F
- Operation Temperature: -25℃～+60℃
- Techniacal Feature: Control input 0-10VDC/PWM,Tech output,Locked-Rotor protection,Reverse Polarity Over-voltage protection, Soft Start Protection.

Technical Specifications

Model	Voltage (V)	Input Power (W)	Current (A)	Air Volume (m³/h)	Static Pressure (Pa)	Speed (RPM)	Noise [dB(A)]
LWBE3G310-092PS-08	230	220	1.55	2524	670	2050	66

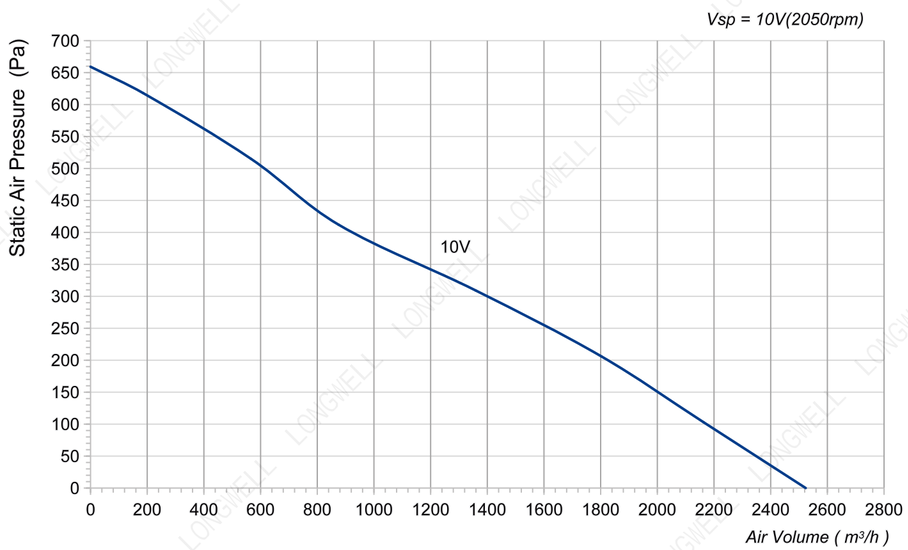

LWBE3G310-092NS-23 (without bracket)

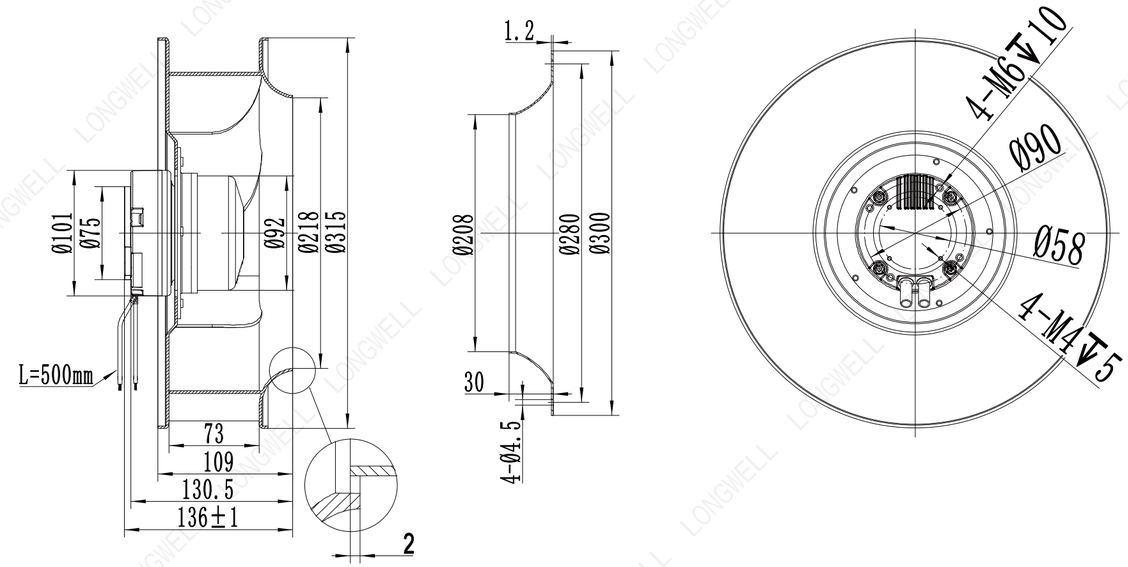

LWBE3G310-092PS-08 (with bracket)

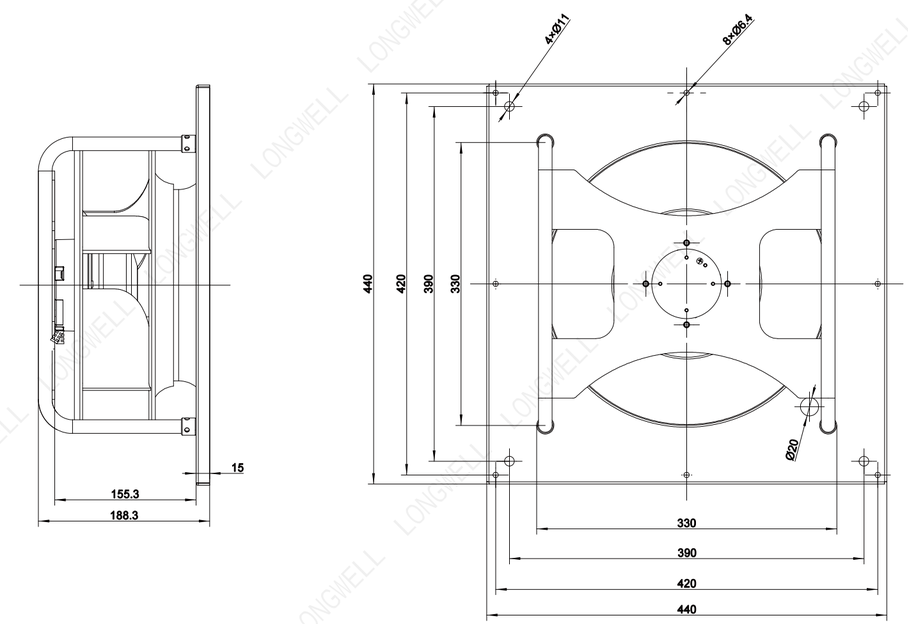

Ningbo Longwell Electric Technology CO, LTD
https://www.longwellfans.com Email:sales@zjlongwell.com

LWBE-310 Series

Product Characteristic

- Impeller Material: Aluminum Alloy
- Supply Voltage: 230V,50/60Hz
- Mode Of Operation: S1
- Protection Class: IP54
- Insulation Class: F
- Operation Temperature: -25℃～+60℃
- Techniacal Feature: Control input 0-10VDC/PWM,Tech output,Locked-Rotor protection,Reverse Polarity Over-voltage protection, Soft Start Protection.

Technical Specifications

Model	Voltage (V)	Input Power (W)	Current (A)	Air Volume (m³/h)	Static Pressure (Pa)	Speed (RPM)	Noise [dB(A)]
LWBE3G310-102PS-02	230	360	2.98	2869	630	2149	69.9

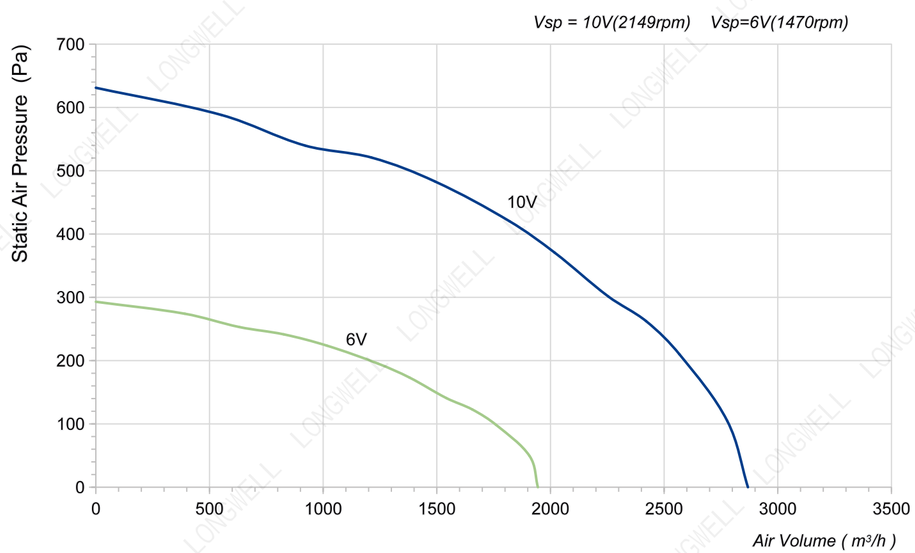

LWBE3G310-102NS-16 (without bracket)

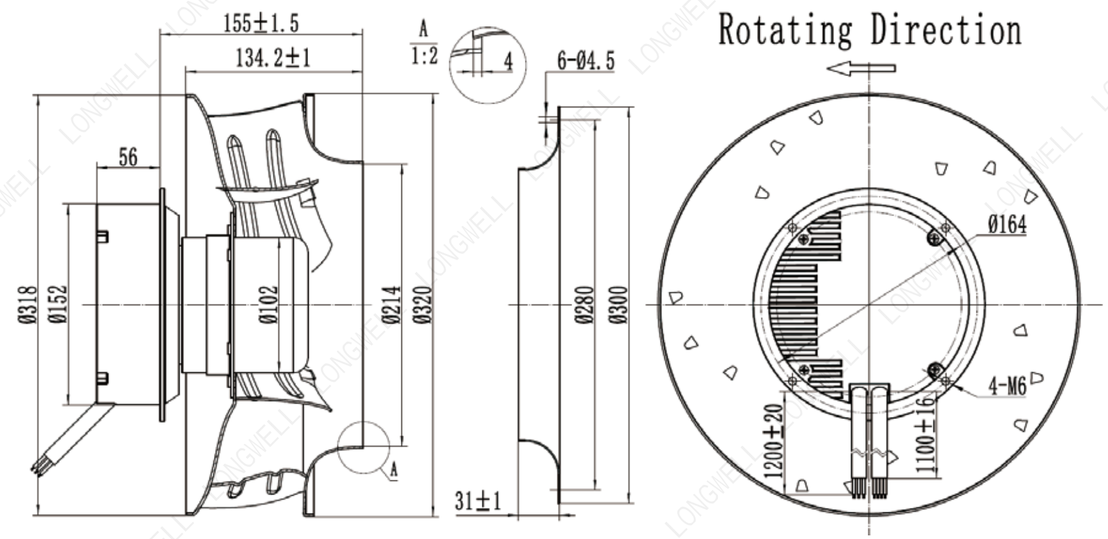

LWBE3G310-102PS-02 (with bracket)

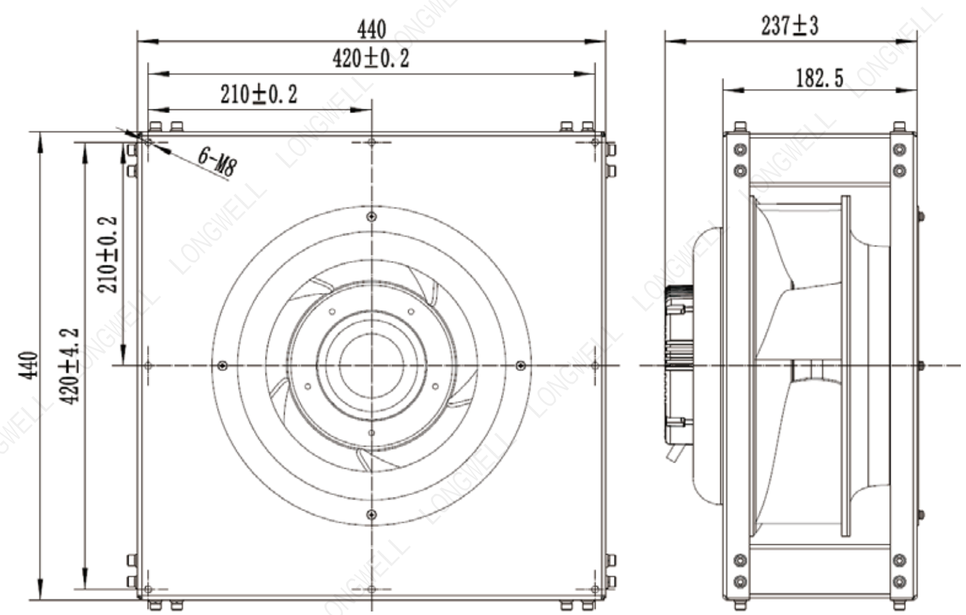

Ningbo Longwell Electric Technology CO, LTD
https://www.longwellfans.com Email:sales@zjlongwell.com

LWBE-310 Series

Product Characteristic

- Impeller Material: Aluminum Alloy
- Supply Voltage: 230V,50/60Hz
- Mode Of Operation: S1
- Protection Class: IP55
- Insulation Class: F
- Operation Temperature: -25℃～+60℃
- Techniacal Feature: Control input 0-10VDC/PWM,Tech output,Locked-Rotor protection,Reverse Polarity Over-voltage protection, Soft Start Protection.

Technical Specifications

Model	Voltage (V)	Input Power (W)	Current (A)	Air Volume (m³/h)	Static Pressure (Pa)	Speed (RPM)	Noise [dB(A)]
LWBE3G310-102PS-03	230	700	3.1	4120	1082	2960	85

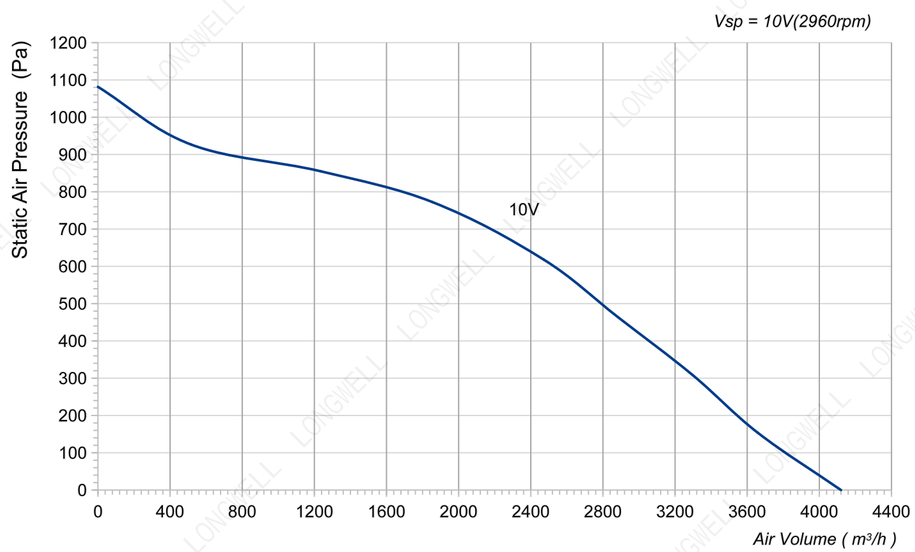

LWBE3G310-102NS-09 (without bracket)

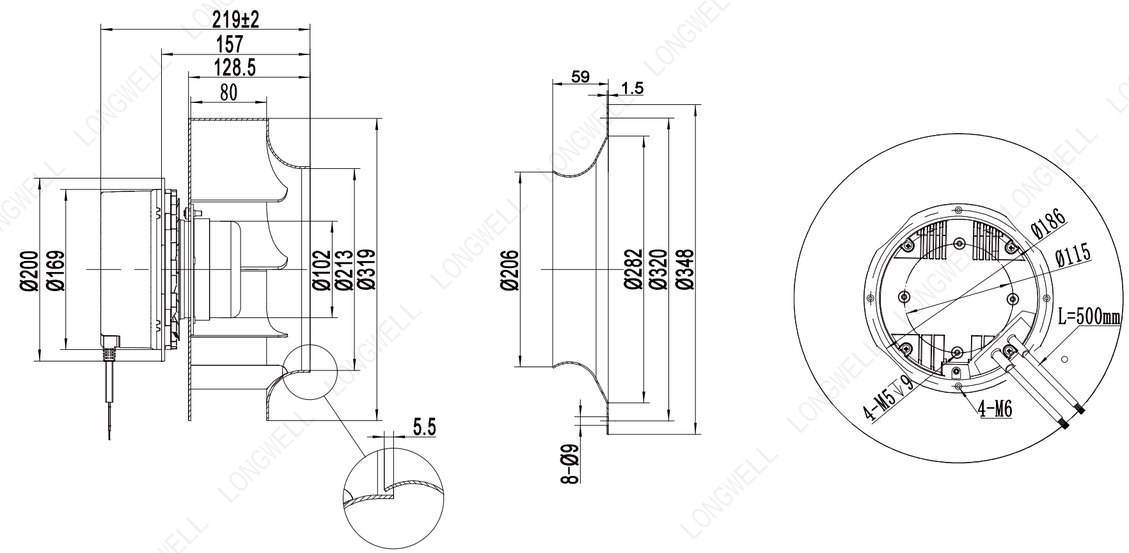

LWBE3G310-102PS-03 (with bracket)

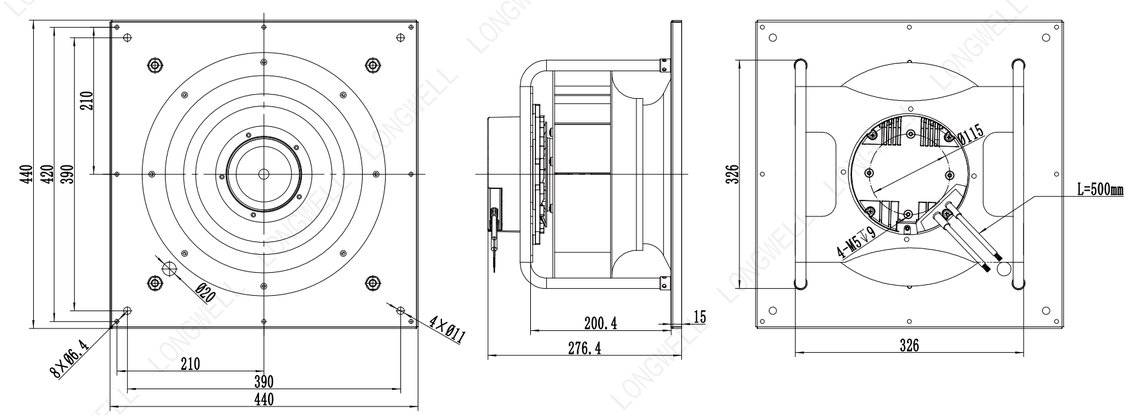

Ningbo Longwell Electric Technology CO, LTD
https://www.longwellfans.com Email:sales@zjlongwell.com

LWBE-310 Series

Product Characteristic

- Impeller Material: Aluminum Alloy
- Supply Voltage: 400V,50/60Hz
- Mode Of Operation: S1
- Protection Class: IP54
- Insulation Class: F
- Operation Temperature: -25℃～+60℃
- Techniacal Feature: Control input 0-10VDC/PWM,Tech output,Locked-Rotor protection,Reverse Polarity Over-voltage protection, Soft Start Protection.

Technical Specifications

Model	Voltage (V)	Input Power (W)	Current (A)	Air Volume (m³/h)	Static Pressure (Pa)	Speed (RPM)	Noise [dB(A)]
LWBE3G310-138PT-04	400	980	1.64	4398	824	2600	74

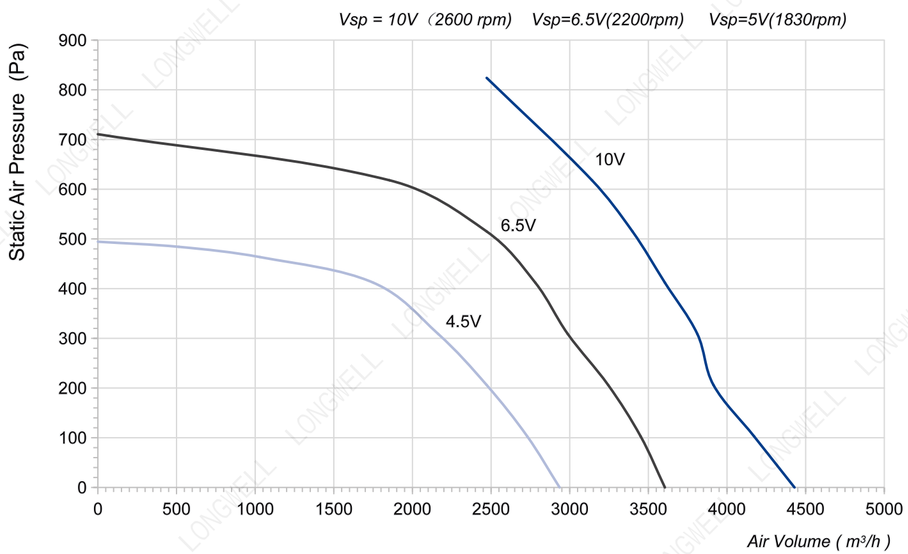

LWBE3G310-138NT-05 (without bracket)

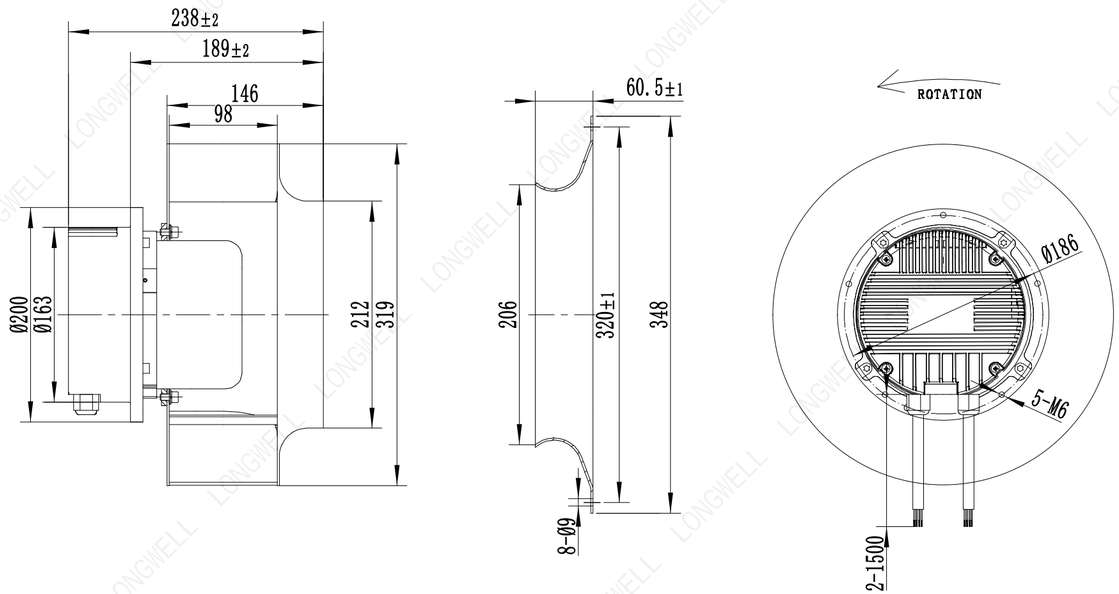

LWBE3G310-138PT-04 (with bracket)

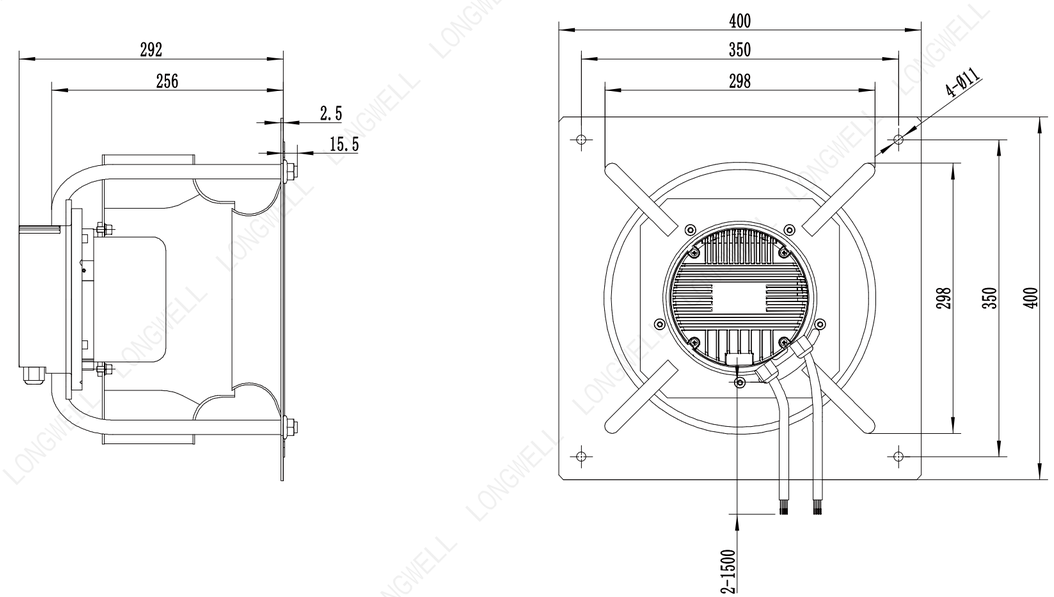

Ningbo Longwell Electric Technology CO, LTD
https://www.longwellfans.com Email:sales@zjlongwell.com

LWBE-310 Series

Product Characteristic

- Impeller Material: Aluminum Alloy
- Supply Voltage: 400V,50/60Hz
- Mode Of Operation: S1
- Protection Class: IP55
- Insulation Class: F
- Operation Temperature: -25℃～+60℃
- Techniacal Feature: Control input 0-10VDC/PWM,Tech output,Locked-Rotor protection,Reverse Polarity Over-voltage protection, Soft Start Protection.

Technical Specifications

Model	Voltage (V)	Input Power (W)	Current (A)	Air Volume (m³/h)	Static Pressure (Pa)	Speed (RPM)	Noise [dB(A)]
LWBE3G310-102PT-09	400	1100	1.2	5150	1730	3000	85

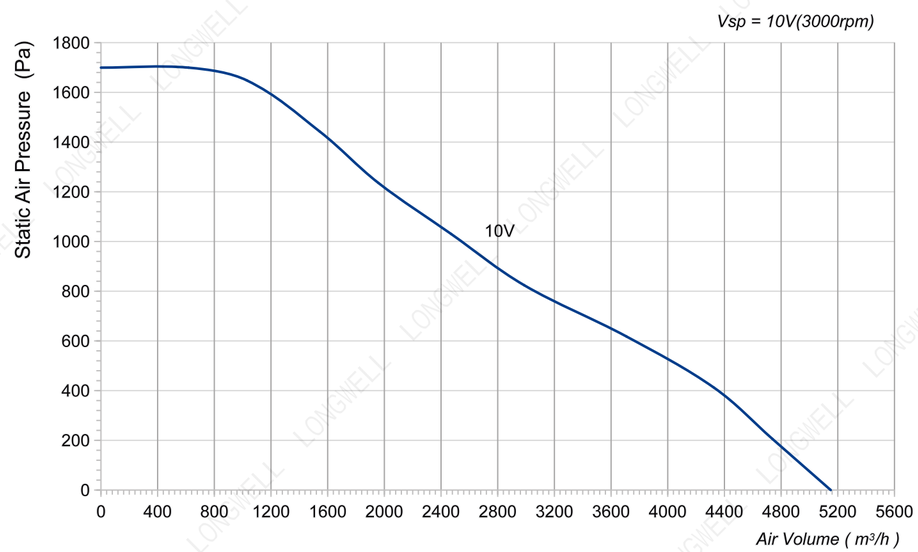

LWBE3G310-102NT-24 (without bracket)

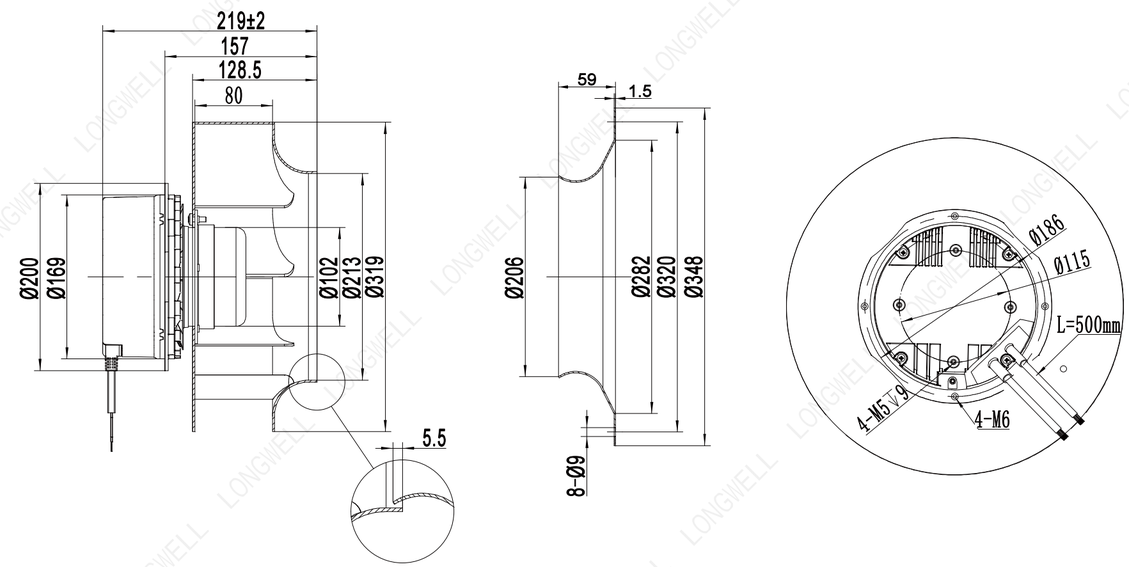

LWBE3G310-102PT-09 (with bracket)

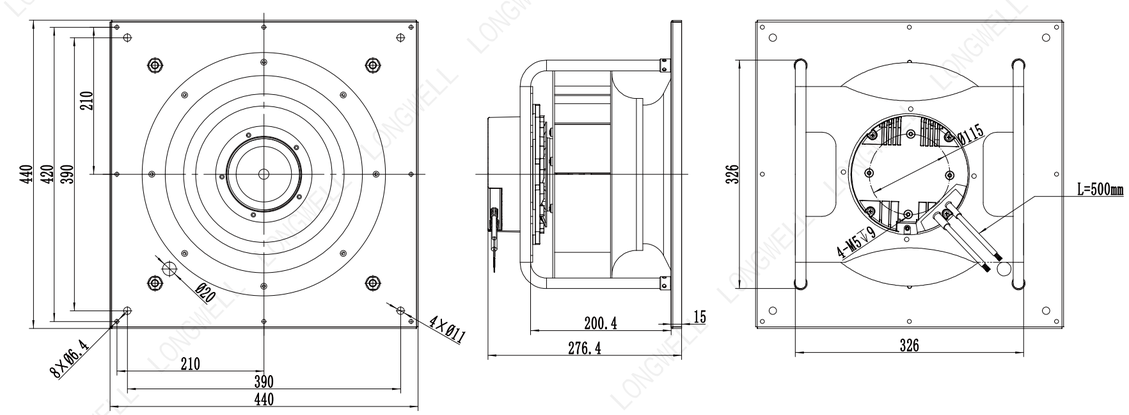

Ningbo Longwell Electric Technology CO, LTD
https://www.longwellfans.com Email:sales@zjlongwell.com

LWBE-310 Series

Product Characteristic

- Impeller Material: Aluminum Alloy
- Supply Voltage: 400V,50/60Hz
- Mode Of Operation: S1
- Protection Class: IP54
- Insulation Class: F
- Operation Temperature: -25℃～+60℃
- Techniacal Feature: Control input 0-10VDC/PWM,Tech output,Locked-Rotor protection,Reverse Polarity Over-voltage protection, Soft Start Protection.

Technical Specifications

Model	Voltage (V)	Input Power (W)	Current (A)	Air Volume (m³/h)	Static Pressure (Pa)	Speed (RPM)	Noise [dB(A)]
LWBE3G310-138PT-10	400	1588	2.4	5593	1082	3300	92

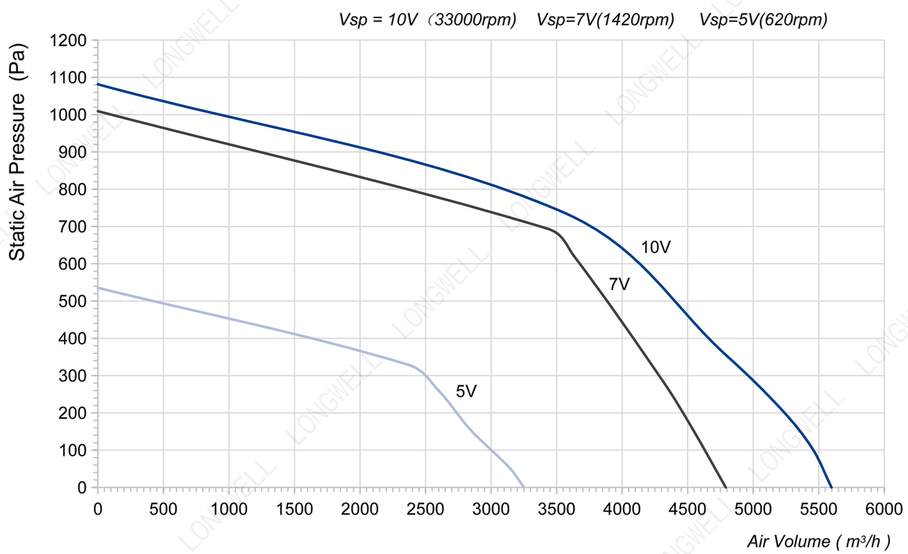

LWBE3G310-138NT-25 (without bracket)

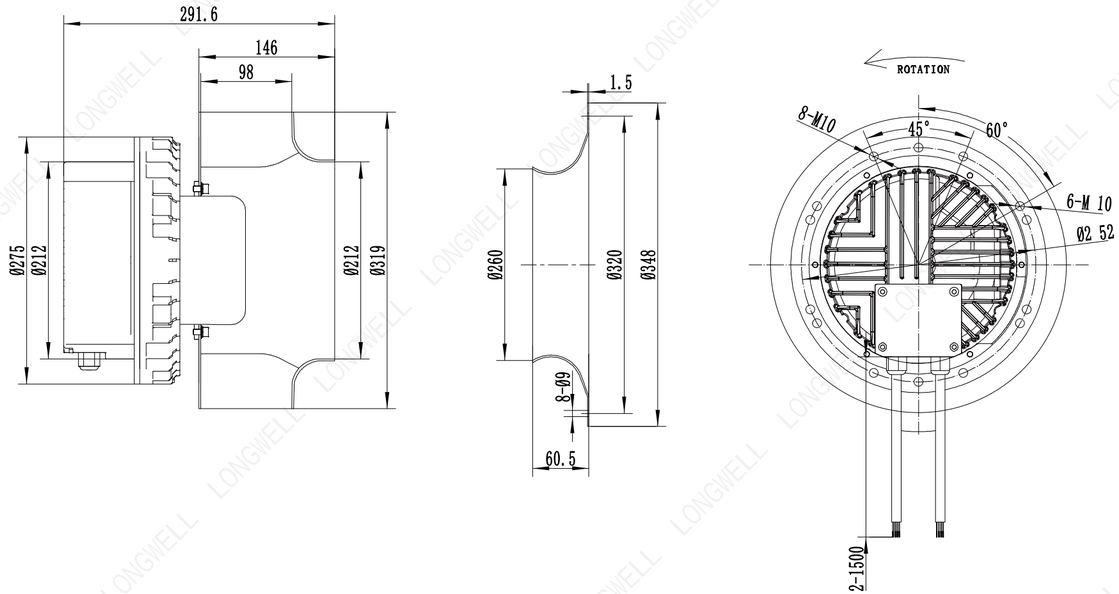

LWBE3G310-138PT-10 (with bracket)

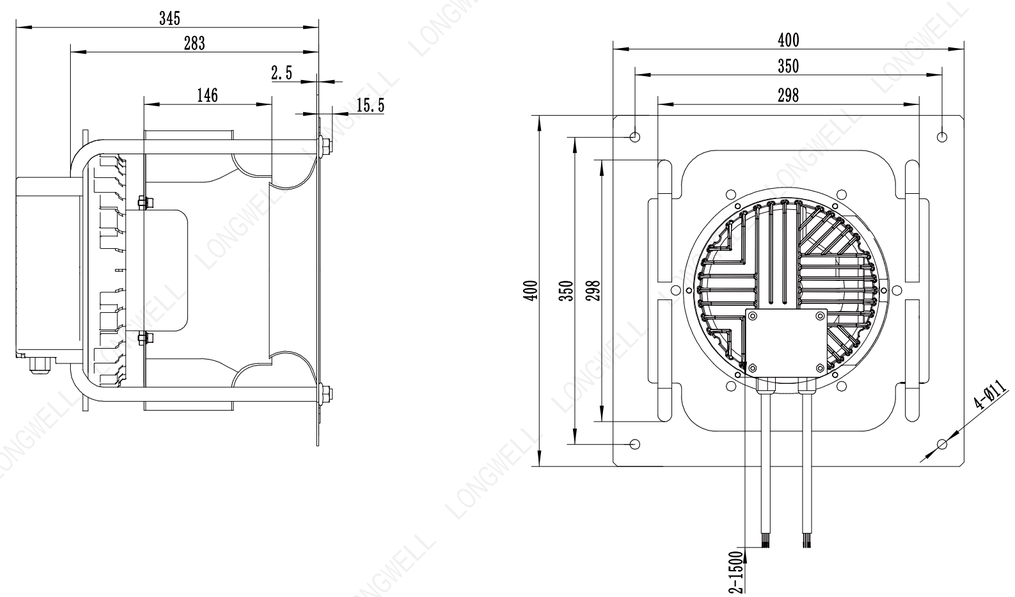

Ningbo Longwell Electric Technology CO, LTD
https://www.longwellfans.com Email:sales@zjlongwell.com

LWBE-355 Series

Product Characteristic

- Impeller Material: Aluminum Alloy
- Supply Voltage: 230V,50/60Hz
- Mode Of Operation: S1
- Protection Class: IP55
- Insulation Class: F
- Operation Temperature: -25℃～+60℃
- Techniacal Feature: Control input 0-10VDC/PWM,Tech output,Locked-Rotor protection,Reverse Polarity Over-voltage protection, Soft Start Protection.

Technical Specifications

Model	Voltage (V)	Input Power (W)	Current (A)	Air Volume (m³/h)	Static Pressure (Pa)	Speed (RPM)	Noise [dB(A)]
LWBE3G355-102PS-09	230	520	3.1	4172	906	2550	75

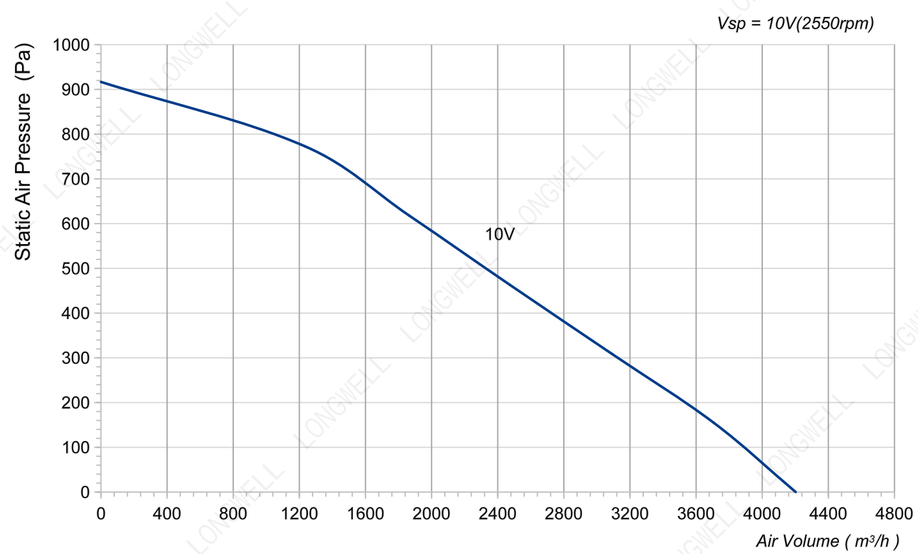

LWBE3G355-102NS-24 (without bracket)

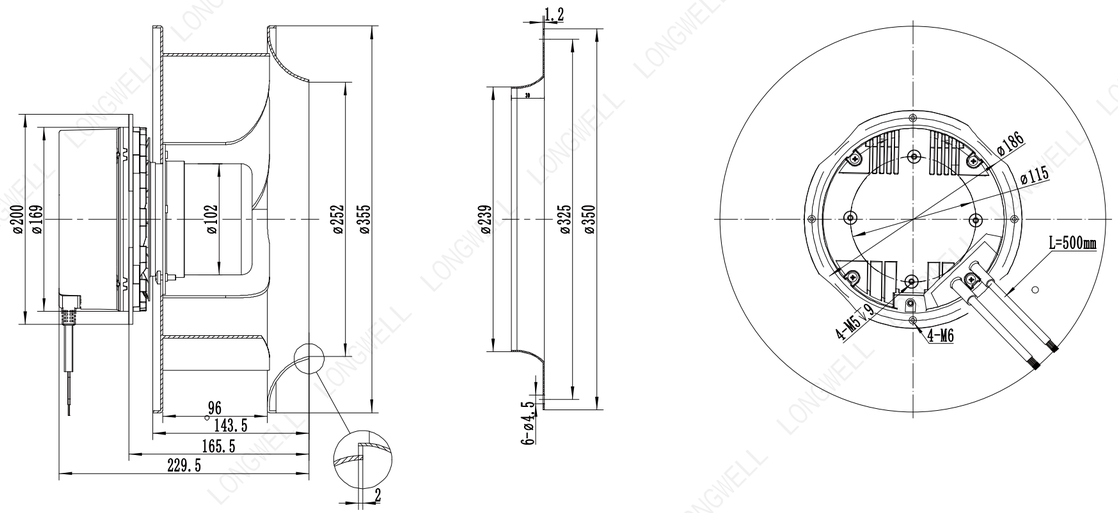

LWBE3G355-102PS-09 (with bracket)

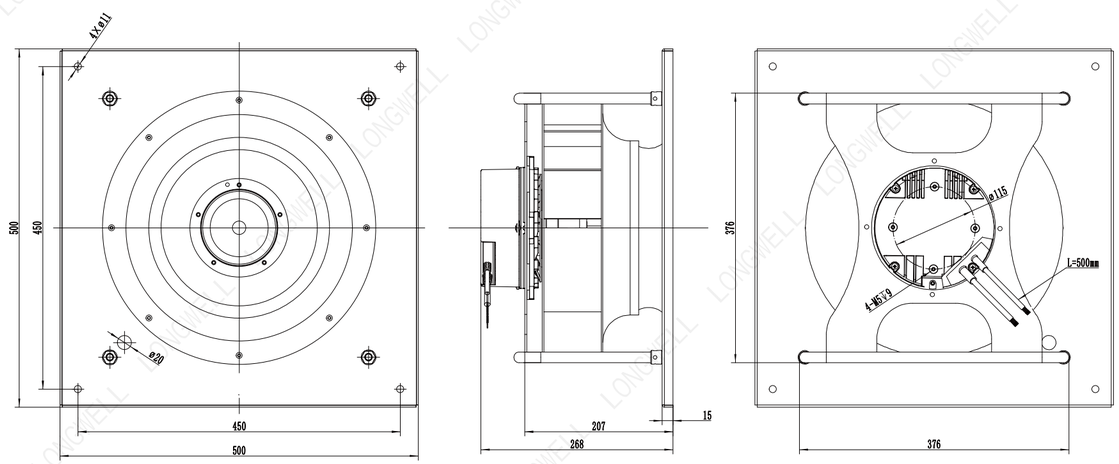

Ningbo Longwell Electric Technology CO, LTD
https://www.longwellfans.com Email:sales@zjlongwell.com

LWBE-355 Series

Product Characteristic

- Impeller Material: Aluminum Alloy
- Supply Voltage: 230V,50/60Hz
- Mode Of Operation: S1
- Protection Class: IP54
- Insulation Class: F
- Operation Temperature: -25℃～+60℃
- Techniacal Feature: Control input 0-10VDC/PWM,Tech output,Locked-Rotor protection,Reverse Polarity Over-voltage protection, Soft Start Protection.

Technical Specifications

Model	Voltage (V)	Input Power (W)	Current (A)	Air Volume (m³/h)	Static Pressure (Pa)	Speed (RPM)	Noise [dB(A)]
LWBE3G355-102PS-02	230	585	5.3	3534	757	2050	/

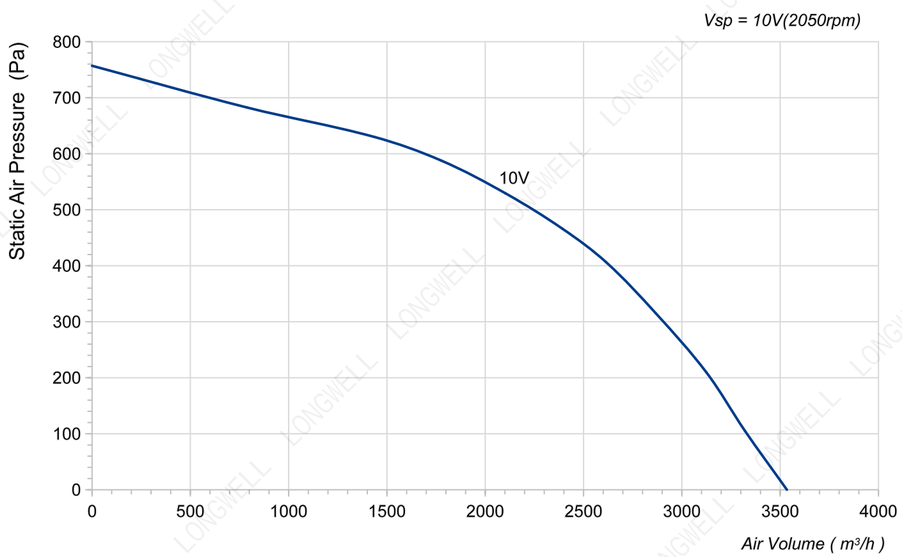

LWBE3G355-102NS-13 (without bracket)

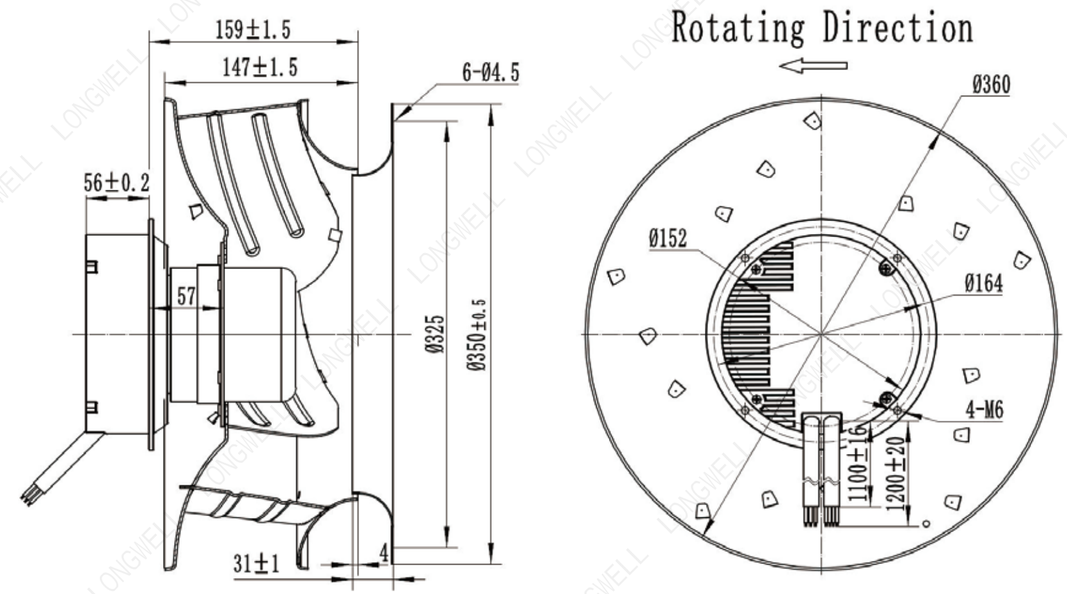

LWBE3G355-102PS-02 (with bracket)

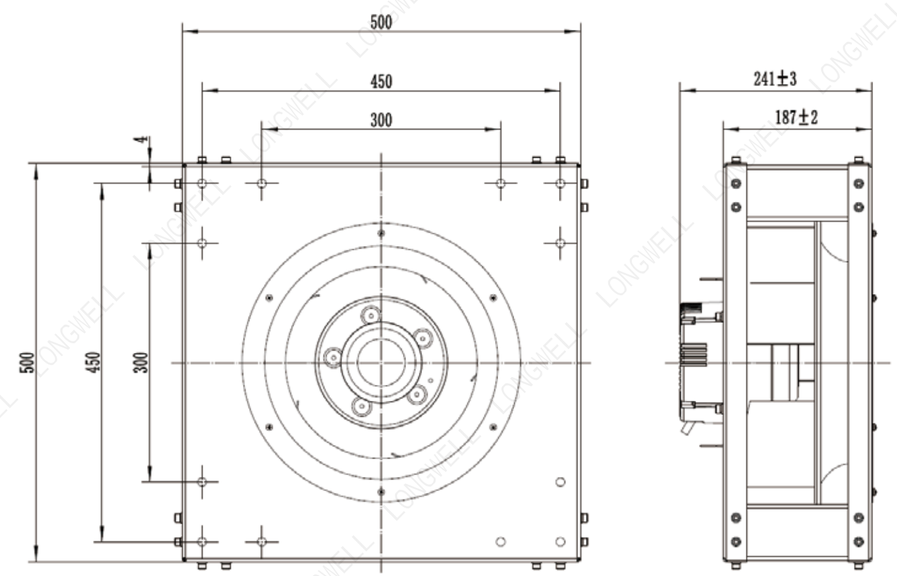

Ningbo Longwell Electric Technology CO, LTD
https://www.longwellfans.com Email:sales@zjlongwell.com

LWBE-355 Series

Product Characteristic

- Impeller Material: Aluminum Alloy
- Supply Voltage: 230V,50/60Hz
- Mode Of Operation: S1
- Protection Class: IP55
- Insulation Class: F
- Operation Temperature: -25℃～+60℃
- Techniacal Feature: Control input 0-10VDC/PWM,Tech output,Locked-Rotor protection,Reverse Polarity Over-voltage protection, Soft Start Protection.

Technical Specifications

Model	Voltage (V)	Input Power (W)	Current (A)	Air Volume (m³/h)	Static Pressure (Pa)	Speed (RPM)	Noise [dB(A)]
LWBE3G355-102PS-03	230	700	3.1	5047	1009	2200	85

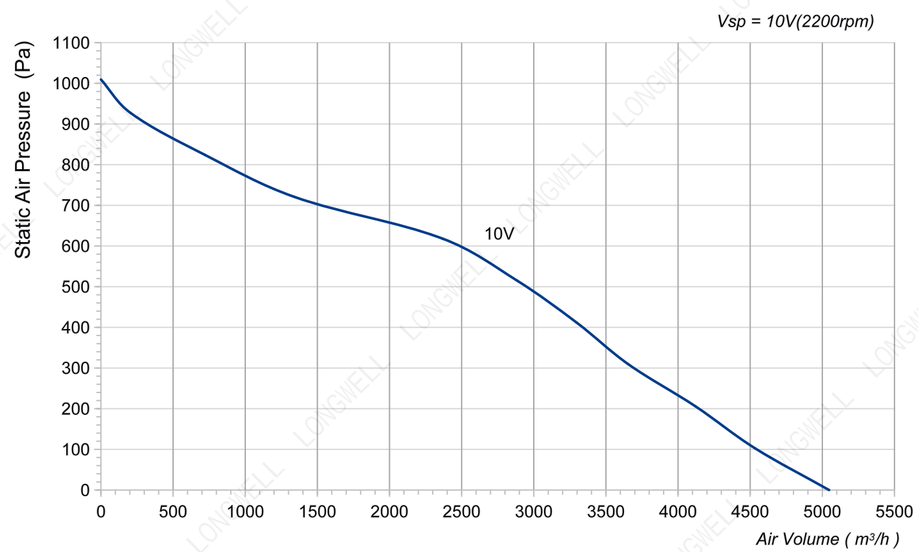

LWBE3G355-102NS-11 (without bracket)

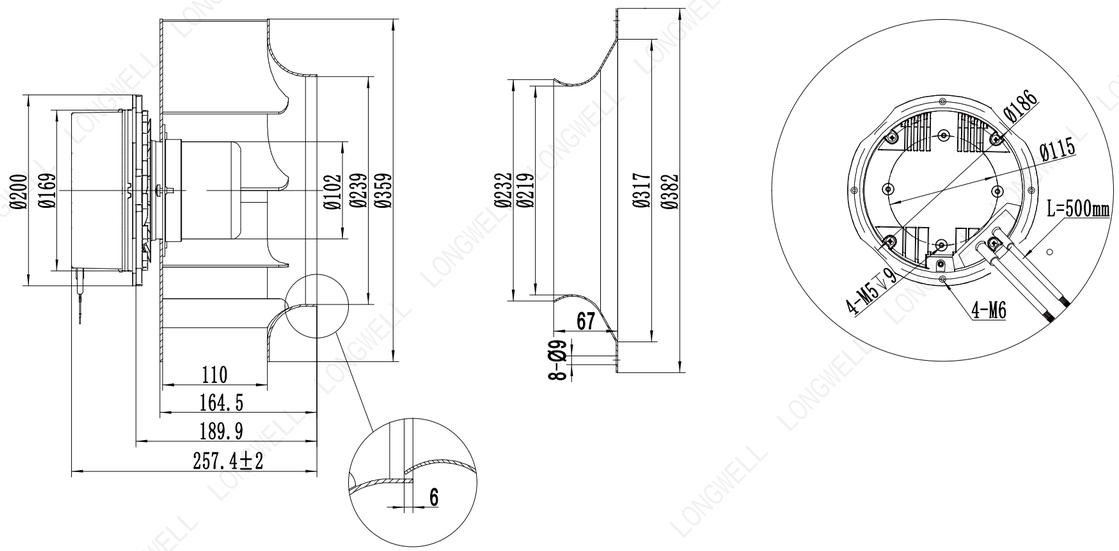

LWBE3G355-102PS-03 (with bracket)

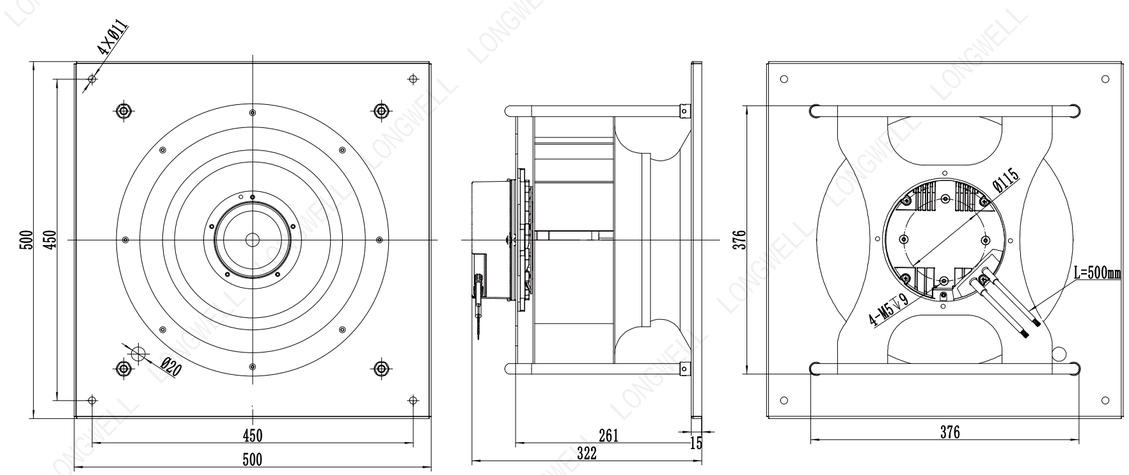

Ningbo Longwell Electric Technology CO, LTD
https://www.longwellfans.com Email:sales@zjlongwell.com

LWBE-355 Series

Product Characteristic

- Impeller Material: Aluminum Alloy
- Supply Voltage: 400V,50/60Hz
- Mode Of Operation: S1
- Protection Class: IP55
- Insulation Class: F
- Operation Temperature: -25℃～+60℃
- Techniacal Feature: Control input 0-10VDC/PWM,Tech output,Locked-Rotor protection,Reverse Polarity Over-voltage protection, Soft Start Protection.

Technical Specifications

Model	Voltage (V)	Input Power (W)	Current (A)	Air Volume (m³/h)	Static Pressure (Pa)	Speed (RPM)	Noise [dB(A)]
LWBE3G355-102PT-10	400	1100	1.76	6180	1751	2550	86

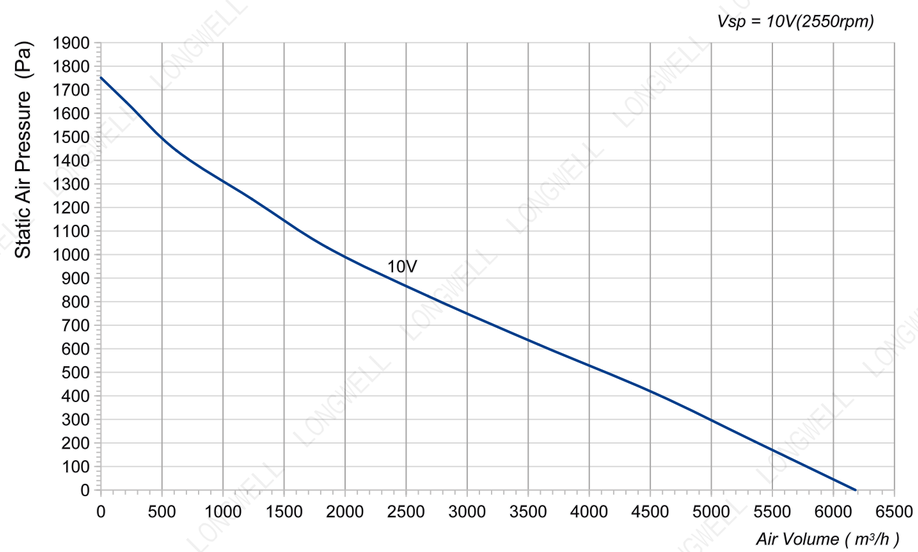

LWBE3G355-102NT-25 (without bracket)

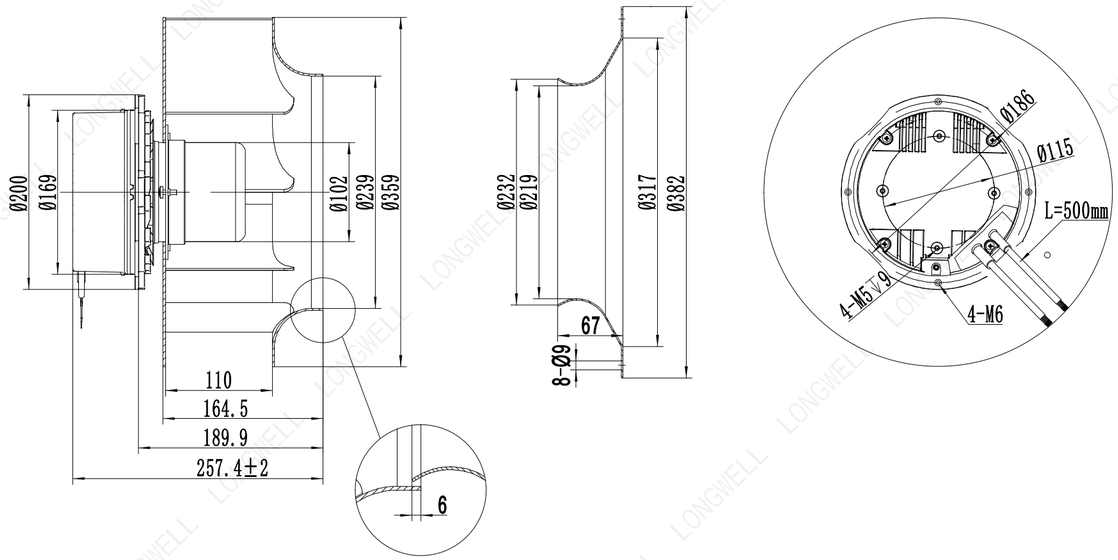

LWBE3G355-102PT-10 (with bracket)

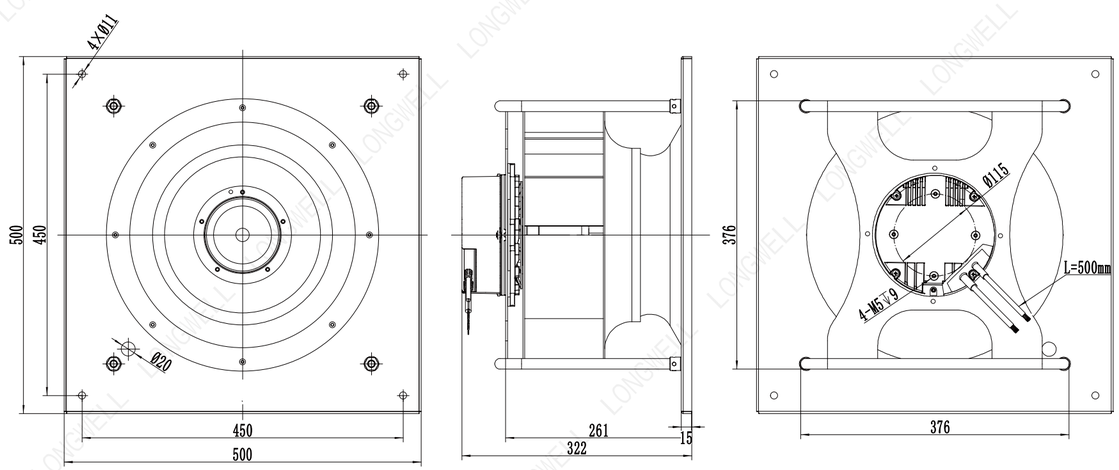

Ningbo Longwell Electric Technology CO, LTD
https://www.longwellfans.com Email:sales@zjlongwell.com

LWBE-355 Series

Product Characteristic

- Impeller Material: Aluminum Alloy
- Supply Voltage: 400V,50/60Hz
- Mode Of Operation: S1
- Protection Class: IP54
- Insulation Class: F
- Operation Temperature: -25℃～+60℃
- Techniacal Feature: Control input 0-10VDC/PWM,Tech output,Locked-Rotor protection,Reverse Polarity Over-voltage protection, Soft Start Protection.

Technical Specifications

Model	Voltage (V)	Input Power (W)	Current (A)	Air Volume (m³/h)	Static Pressure (Pa)	Speed (RPM)	Noise [dB(A)]
LWBE3G355-138PT-12	400	1500	3.6	6249	1056	2710	77

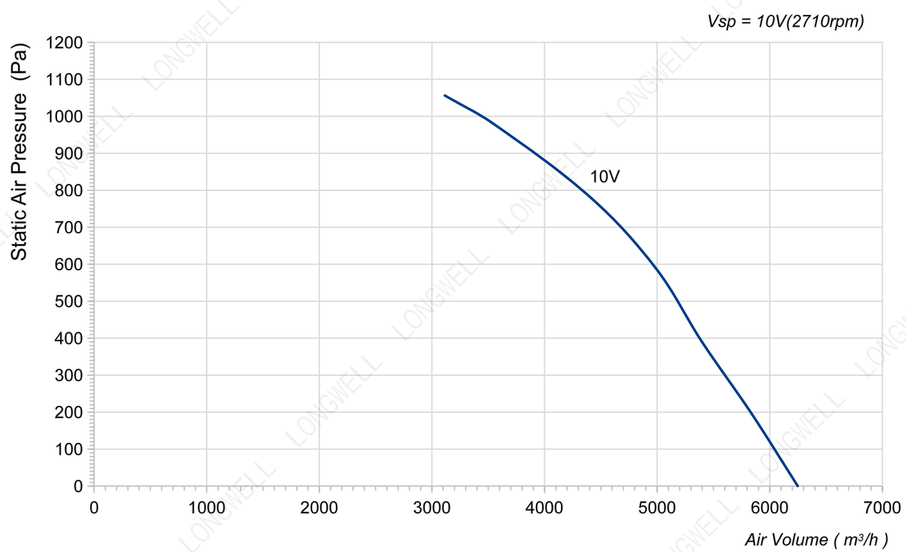

LWBE3G355-138NT-27 (without bracket)

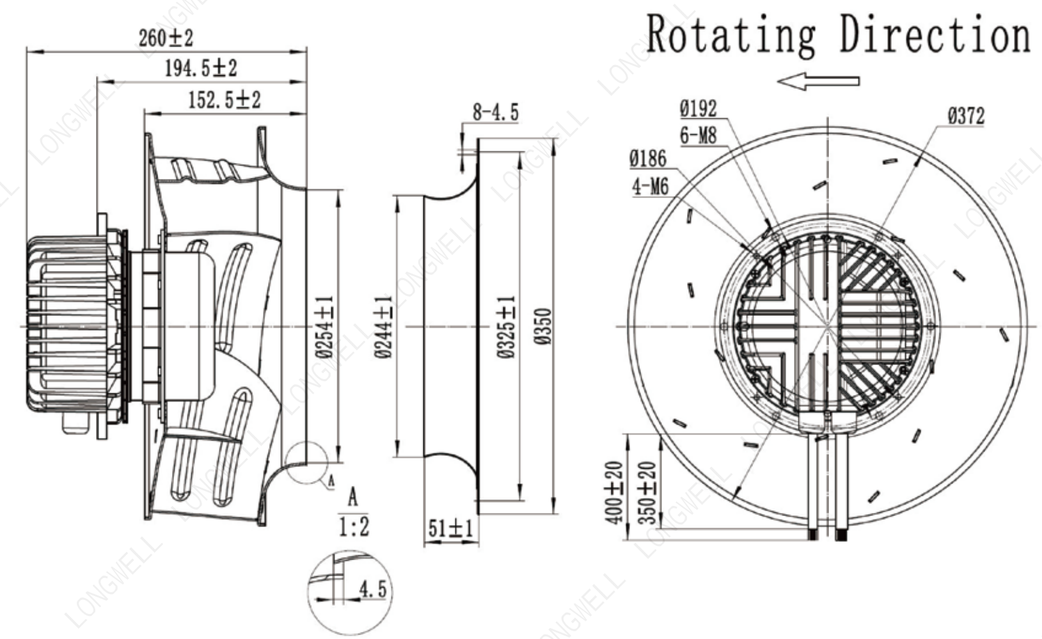

LWBE3G355-138PT-12 (with bracket)

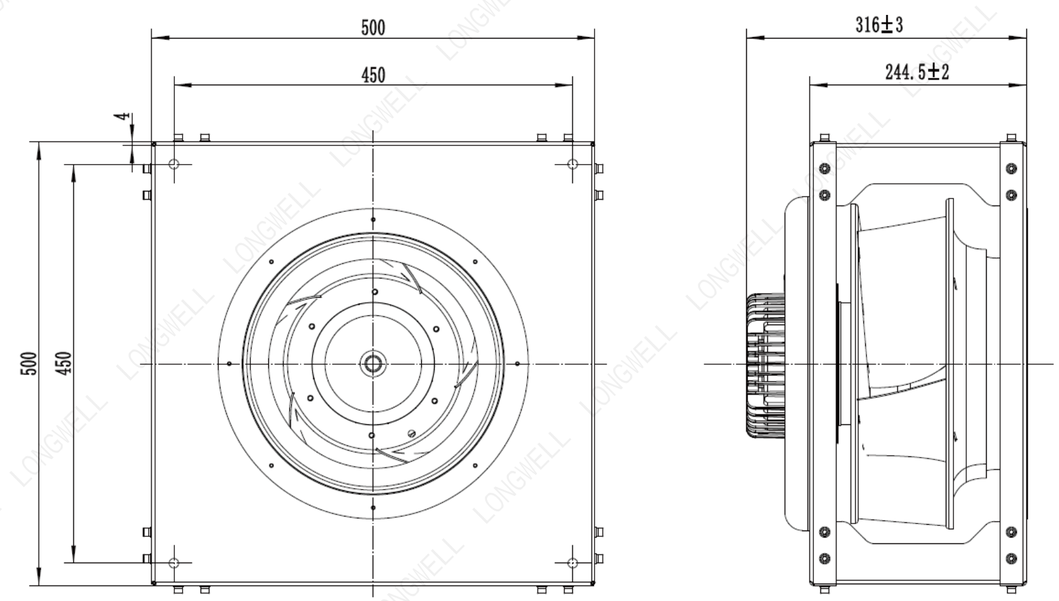

Ningbo Longwell Electric Technology CO, LTD
https://www.longwellfans.com Email:sales@zjlongwell.com

LWBE-355 Series

Product Characteristic

- Impeller Material: Aluminum Alloy
- Supply Voltage: 400V,50/60Hz
- Mode Of Operation: S1
- Protection Class: IP54
- Insulation Class: F
- Operation Temperature: -25℃～+60℃
- Techniacal Feature: Control input 0-10VDC/PWM,Tech output,Locked-Rotor protection,Reverse Polarity Over-voltage protection, Soft Start Protection.

Technical Specifications

Model	Voltage (V)	Input Power (W)	Current (A)	Air Volume (m³/h)	Static Pressure (Pa)	Speed (RPM)	Noise [dB(A)]
LWBE3G355-138PT-05	400	1700	2.8	7045	830	2700	81

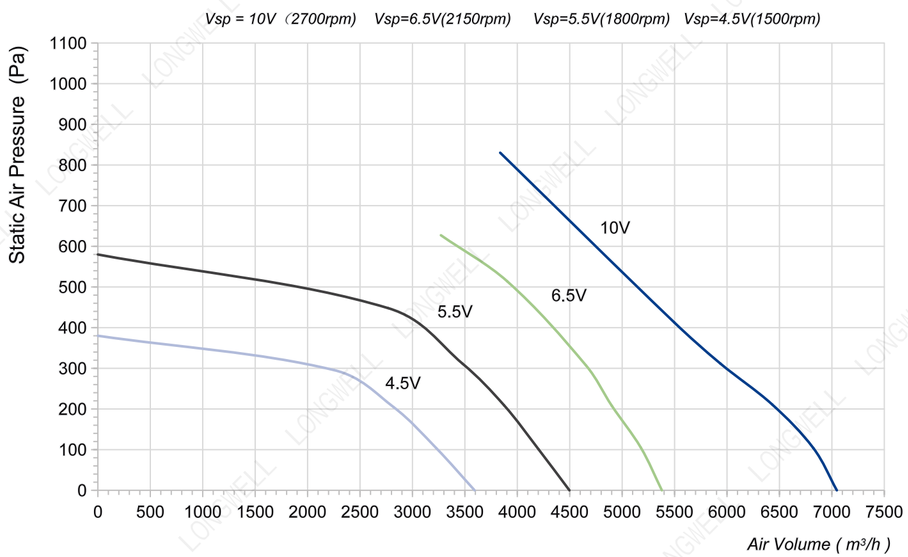

LWBE3G355-138NT-12 (without bracket)

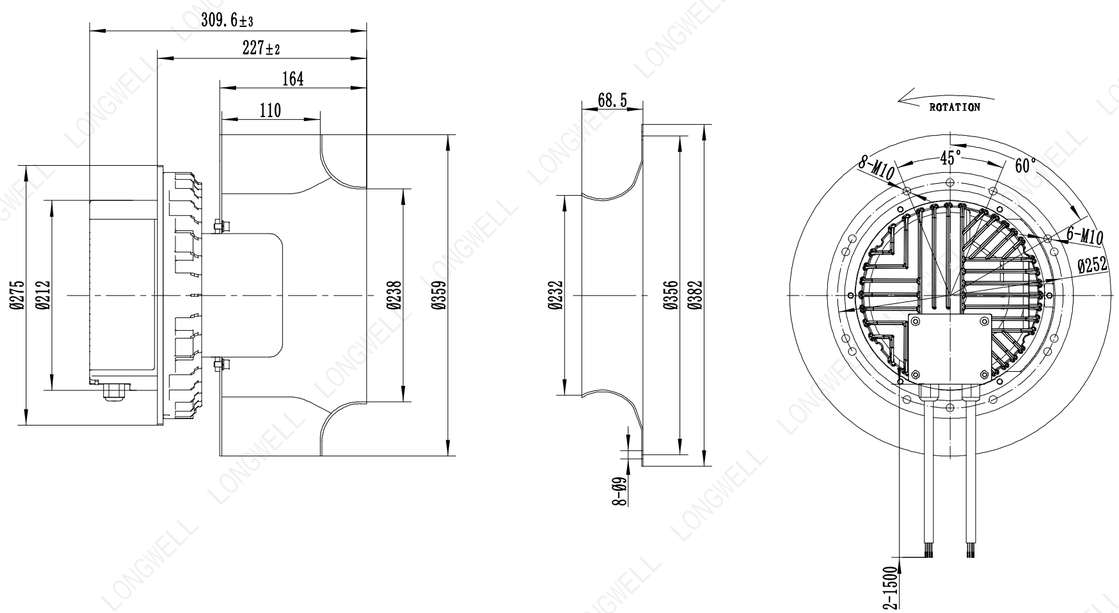

LWBE3G355-138PT-05 (with bracket)

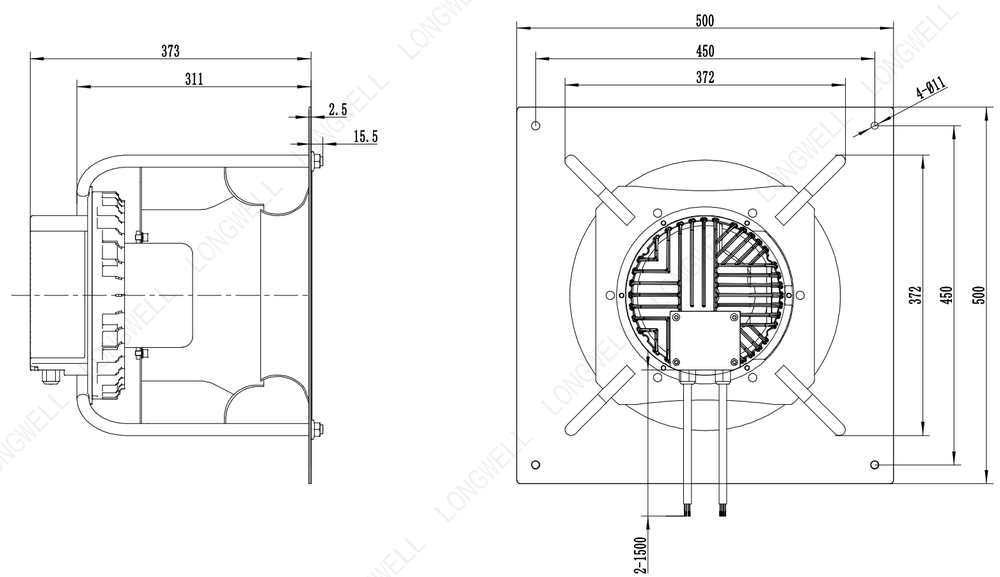

Ningbo Longwell Electric Technology CO, LTD
https://www.longwellfans.com Email:sales@zjlongwell.com

LWBE-355 Series

Product Characteristic

- Impeller Material: Aluminum Alloy
- Supply Voltage: 400V,50/60Hz
- Mode Of Operation: S1
- Protection Class: IP54
- Insulation Class: F
- Operation Temperature: -25℃～+60℃
- Techniacal Feature: Control input 0-10VDC/PWM,Tech output,Locked-Rotor protection,Reverse Polarity Over-voltage protection, Soft Start Protection.

Technical Specifications

Model	Voltage (V)	Input Power (W)	Current (A)	Air Volume (m³/h)	Static Pressure (Pa)	Speed (RPM)	Noise [dB(A)]
LWBE3G355-188PT-11	400	3090	4.2	8034	1545	3200	96

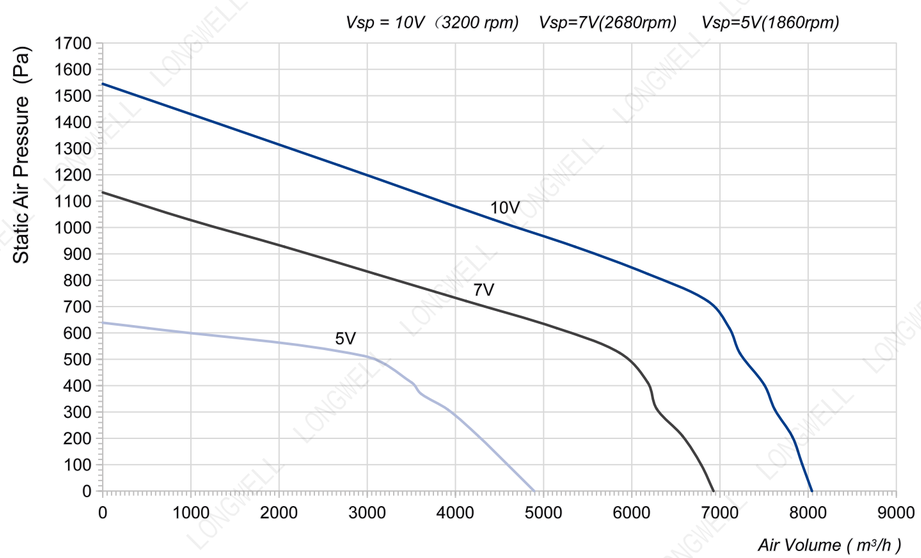

LWBE3G355-188NT-26 (without bracket)

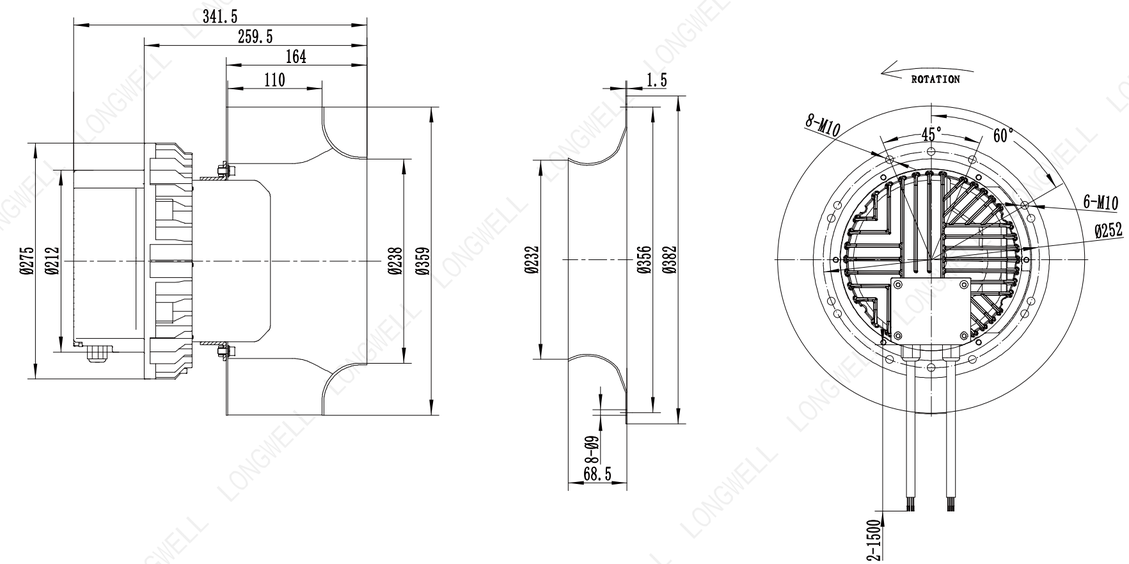

LWBE3G355-188PT-11 (with bracket)

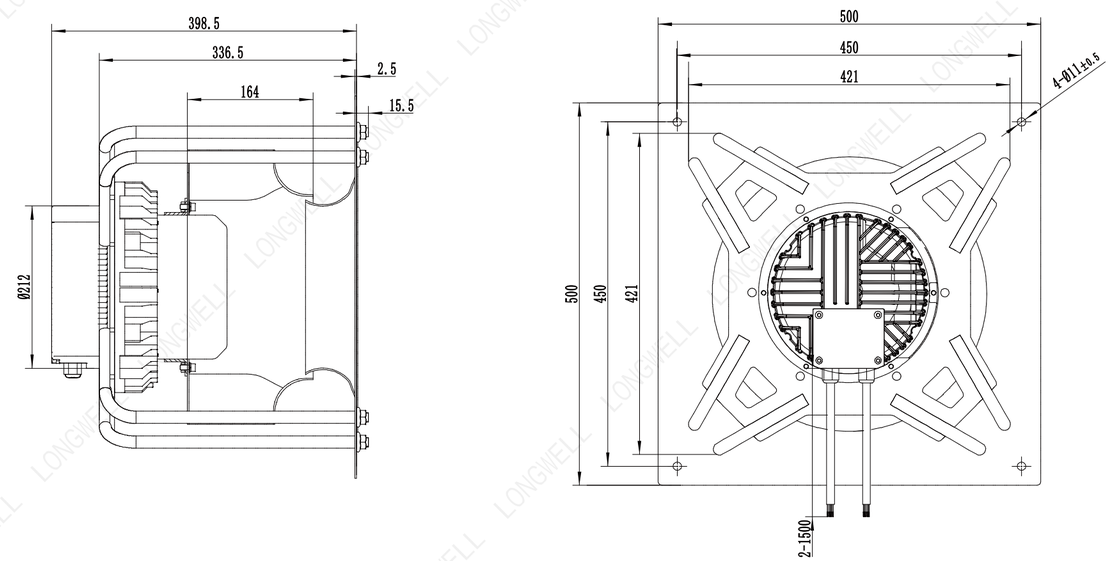

Ningbo Longwell Electric Technology CO, LTD
https://www.longwellfans.com Email:sales@zjlongwell.com

LWBE-400 Series

Product Characteristic

- Impeller Material: Aluminum Alloy
- Supply Voltage: 230V,50/60Hz
- Mode Of Operation: S1
- Protection Class: IP54
- Insulation Class: F
- Operation Temperature: -25℃～+60℃
- Techniacal Feature: Control input 0-10VDC/PWM,Tech output,Locked-Rotor protection,Reverse Polarity Over-voltage protection, Soft Start Protection.

Technical Specifications

Model	Voltage (V)	Input Power (W)	Current (A)	Air Volume (m³/h)	Static Pressure (Pa)	Speed (RPM)	Noise [dB(A)]
LWBE3G400-102PS-01	230	330	1.5	3914	556	1430	70

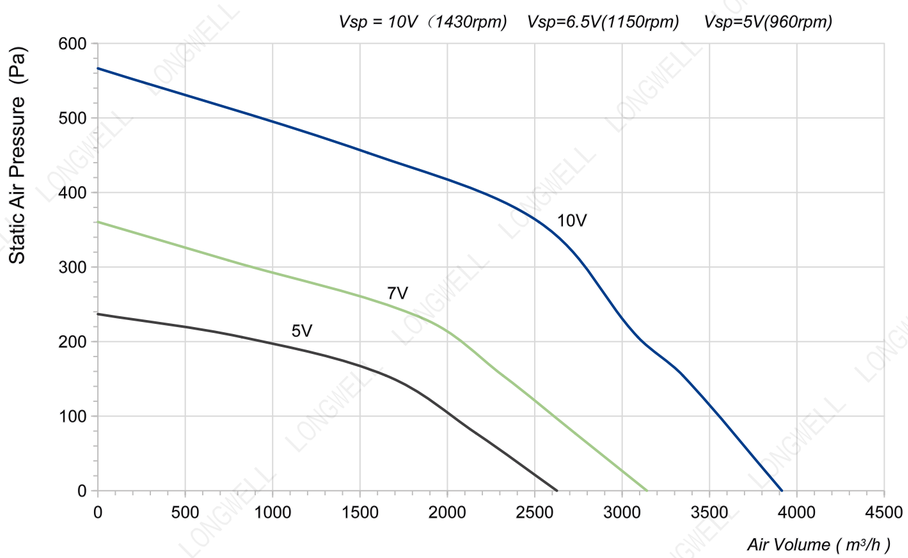

LWBE3G400-102NS-02 (without bracket)

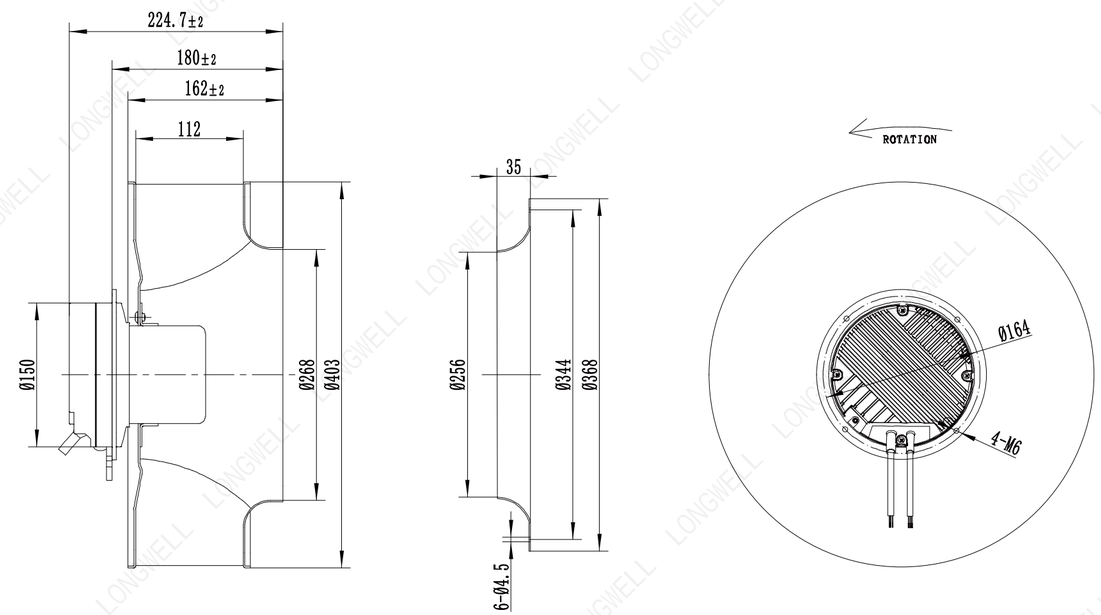

LWBE3G400-102PS-01 (with bracket)

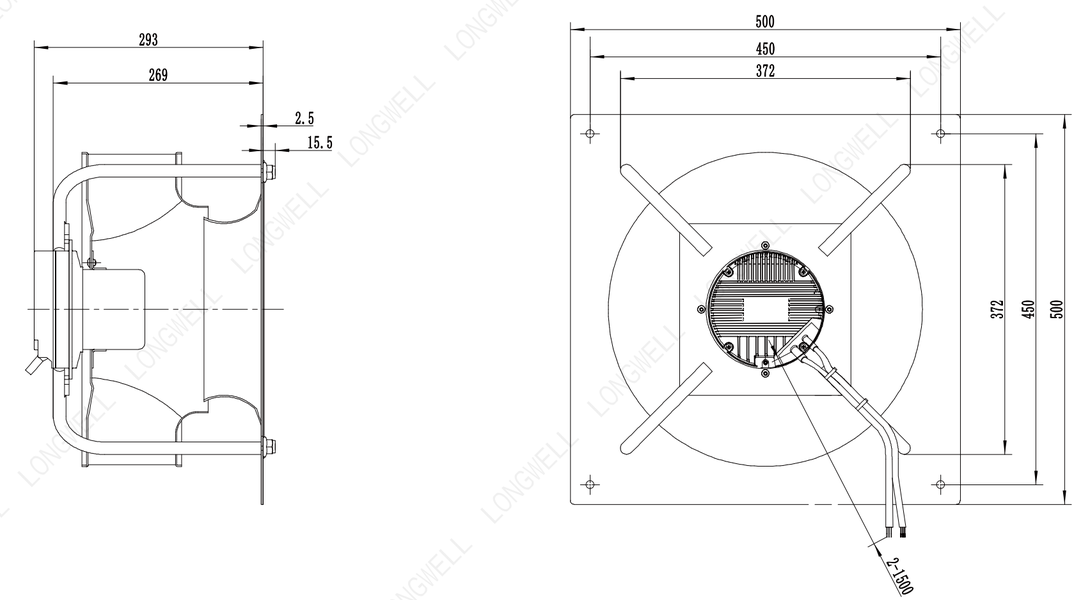

Ningbo Longwell Electric Technology CO, LTD
https://www.longwellfans.com Email:sales@zjlongwell.com

LWBE-400 Series

Product Characteristic

- Impeller Material: Aluminum Alloy
- Supply Voltage: 230V,50/60Hz
- Mode Of Operation: S1
- Protection Class: IP55
- Insulation Class: F
- Operation Temperature: -25℃～+60℃
- Techniacal Feature: Control input 0-10VDC/PWM,Tech output,Locked-Rotor protection,Reverse Polarity Over-voltage protection, Soft Start Protection.

Technical Specifications

Model	Voltage (V)	Input Power (W)	Current (A)	Air Volume (m^3/h)	Static Pressure (Pa)	Speed (RPM)	Noise [dB(A)]
LWBE3G400-102PS-02	230	700	3.1	6489	979	1800	85

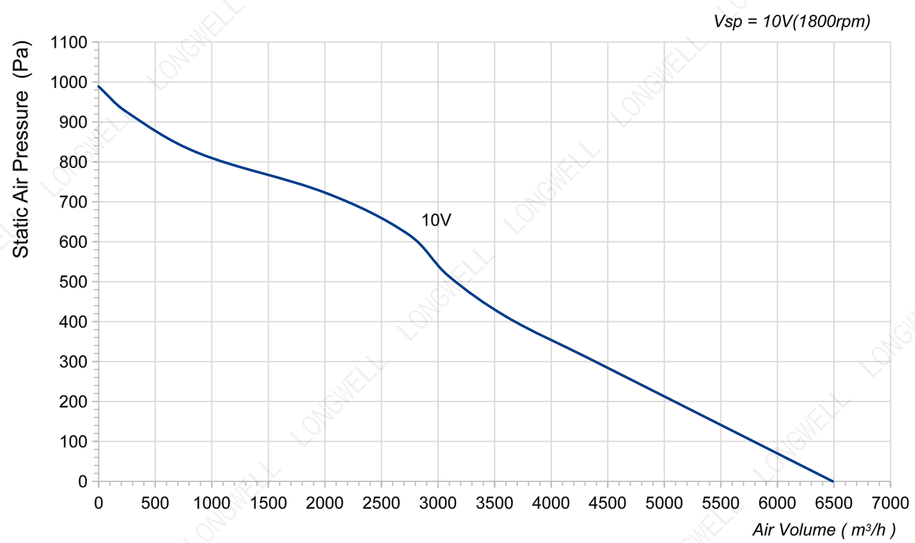

LWBE3G400-102NS-11 (without bracket)

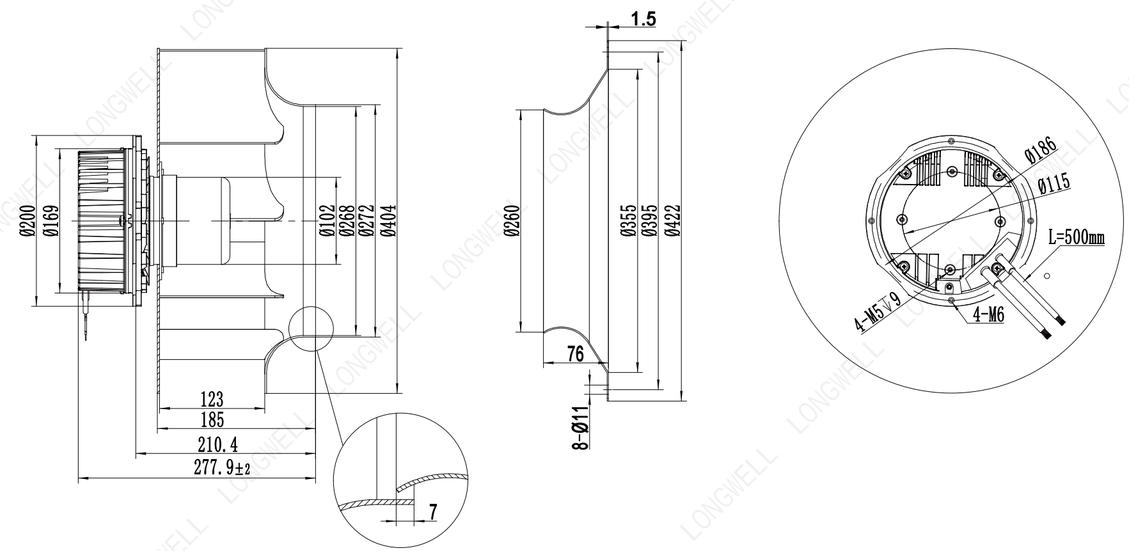

LWBE3G400-102PS-02 (with bracket)

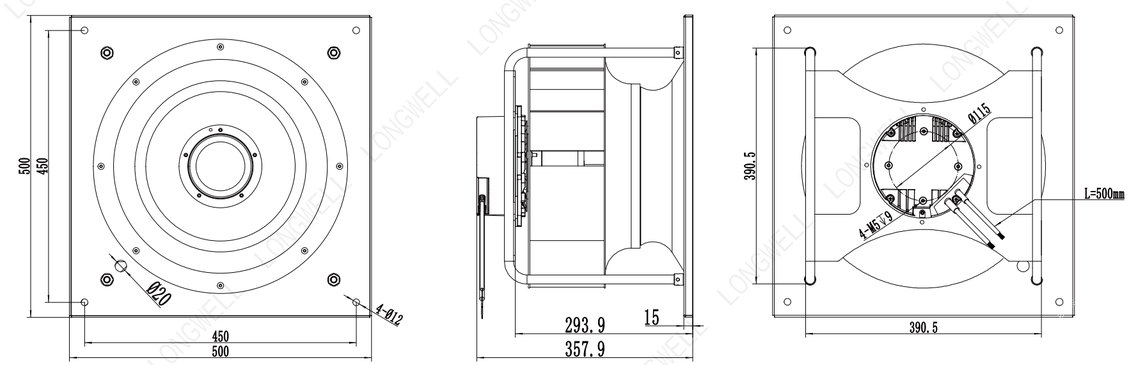

Ningbo Longwell Electric Technology CO, LTD
https://www.longwellfans.com Email:sales@zjlongwell.com

LWBE-400 Series

Product Characteristic

- Impeller Material: Aluminum Alloy
- Supply Voltage: 400V,50/60Hz
- Mode Of Operation: S1
- Protection Class: IP54
- Insulation Class: F
- Operation Temperature: -25℃～+60℃
- Techniacal Feature: Control input 0-10VDC/PWM,Tech output,Locked-Rotor protection,Reverse Polarity Over-voltage protection, Soft Start Protection.

Technical Specifications

Model	Voltage (V)	Input Power (W)	Current (A)	Air Volume (m^3/h)	Static Pressure (Pa)	Speed (RPM)	Noise [dB(A)]
LWBE3G400-138PT-04	400	1480	3.3	7459	882	2060	/

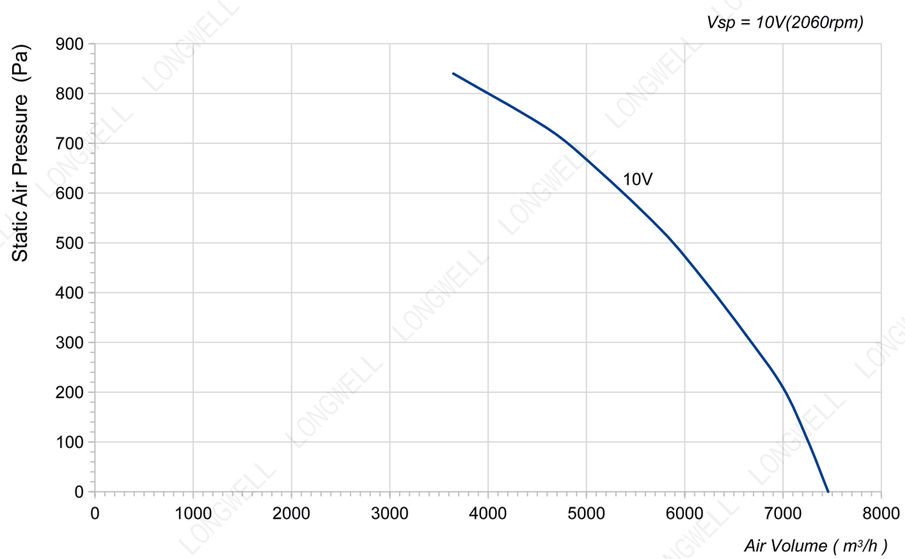

LWBE3G400-138NT-12 (without bracket)

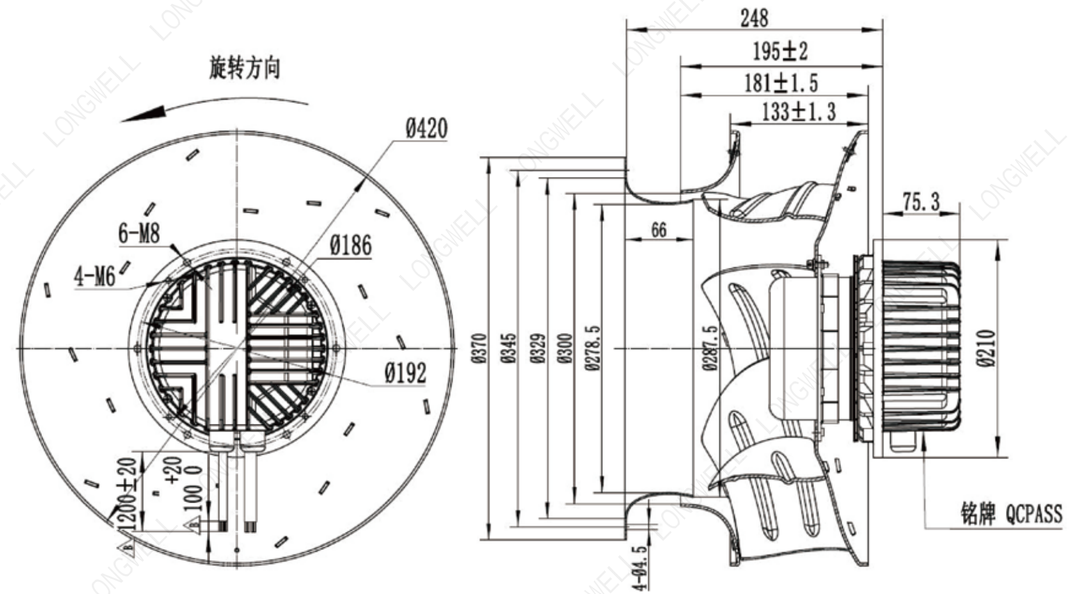

LWBE3G400-138PT-04 (with bracket)

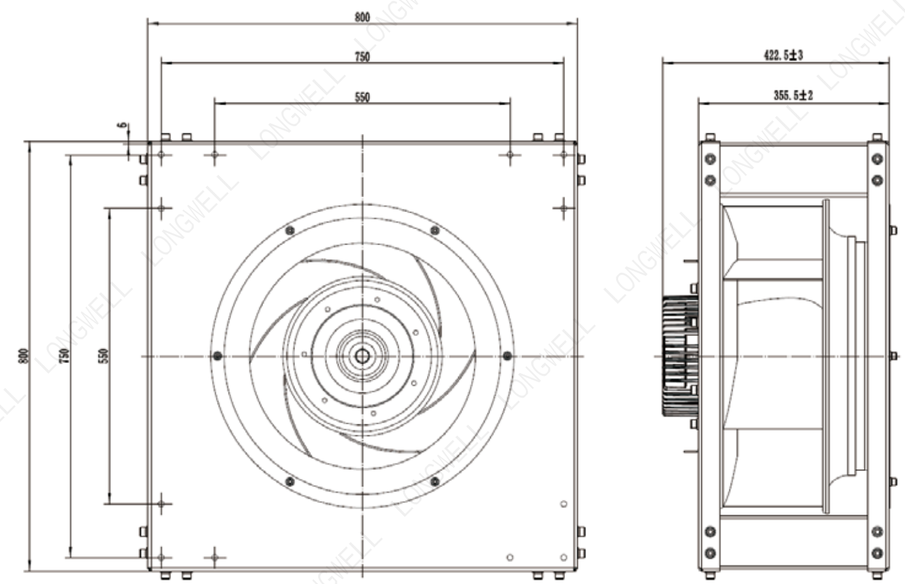

Ningbo Longwell Electric Technology CO, LTD
https://www.longwellfans.com Email:sales@zjlongwell.com

LWBE-400 Series

Product Characteristic

- Impeller Material: Aluminum Alloy
- Supply Voltage: 400V,50/60Hz
- Mode Of Operation: S1
- Protection Class: IP54
- Insulation Class: F
- Operation Temperature: -25℃～+60℃
- Techniacal Feature: Control input 0-10VDC/PWM,Tech output,Locked-Rotor protection,Reverse Polarity Over-voltage protection, Soft Start Protection.

Technical Specifications

Model	Voltage (V)	Input Power (W)	Current (A)	Air Volume (m³/h)	Static Pressure (Pa)	Speed (RPM)	Noise [dB(A)]
LWBE3G400-188PT-07	400	3310	4.2	9682	1627	2650	84

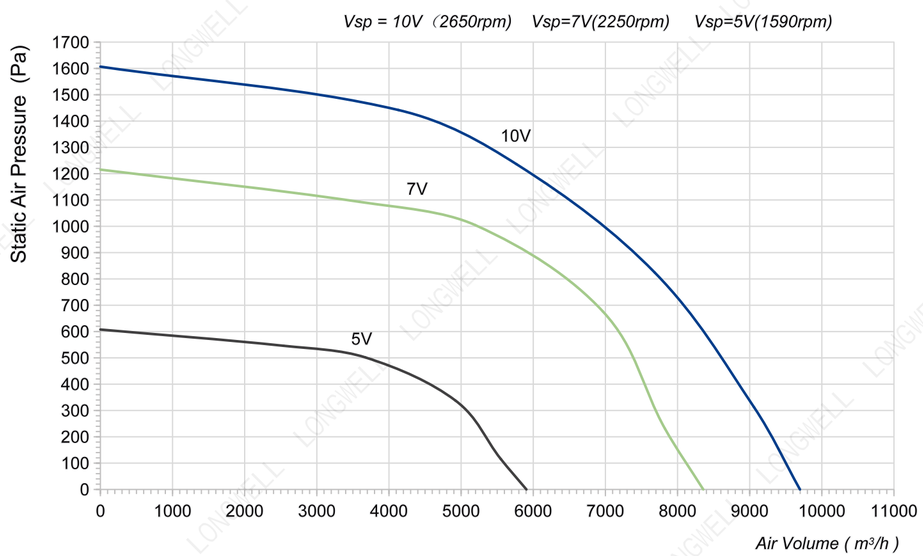

LWBE3G400-188NT-17 (without bracket)

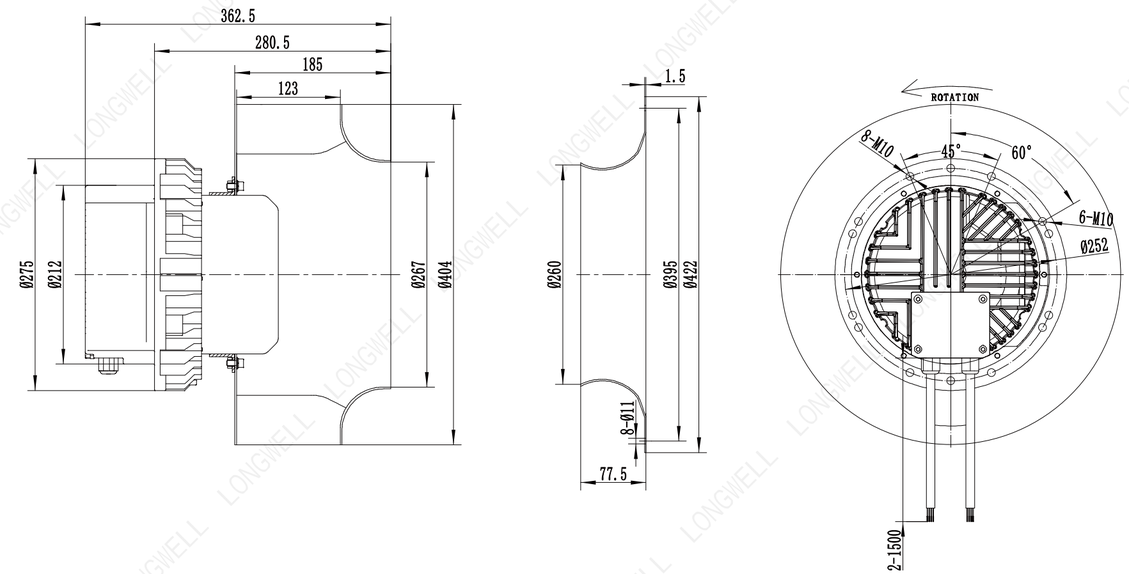

LWBE3G400-188PT-07 (with bracket)

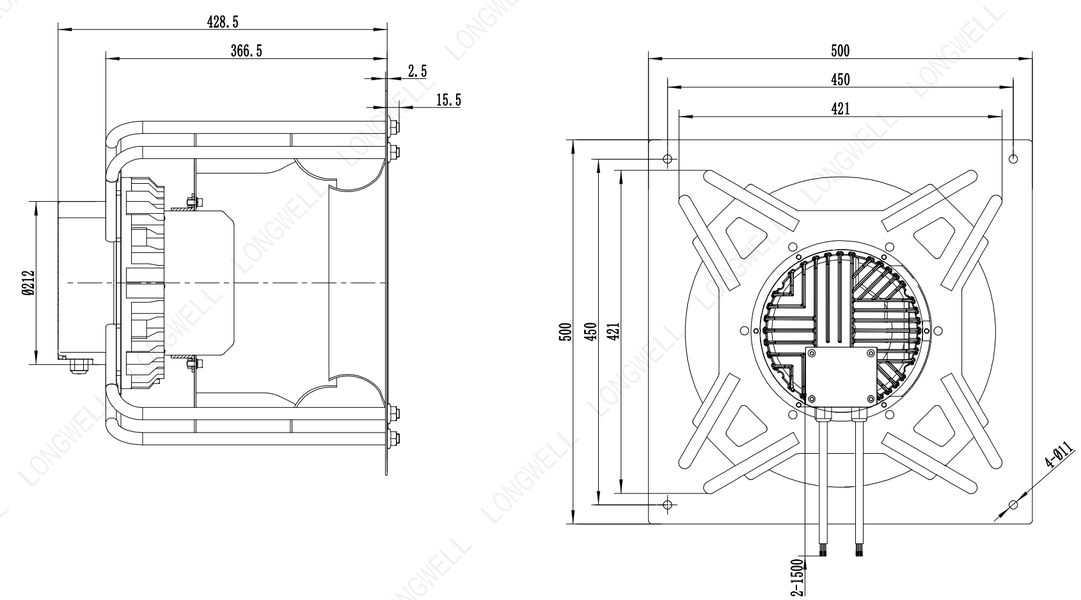

Ningbo Longwell Electric Technology CO, LTD
https://www.longwellfans.com Email:sales@zjlongwell.com

LWBE-450 Series

Product Characteristic

- Impeller Material: Aluminum Alloy
- Supply Voltage: 230V,50/60Hz
- Mode Of Operation: S1
- Protection Class: IP55
- Insulation Class: F
- Operation Temperature: -25℃～+60℃
- Techniacal Feature: Control input 0-10VDC/PWM,Tech output,Locked-Rotor protection,Reverse Polarity Over-voltage protection, Soft Start Protection.

Technical Specifications

Model	Voltage (V)	Input Power (W)	Current (A)	Air Volume (m³/h)	Static Pressure (Pa)	Speed (RPM)	Noise [dB(A)]
LWBE3G450-102PS-11	230	700	3.1	6901	597	1650	80

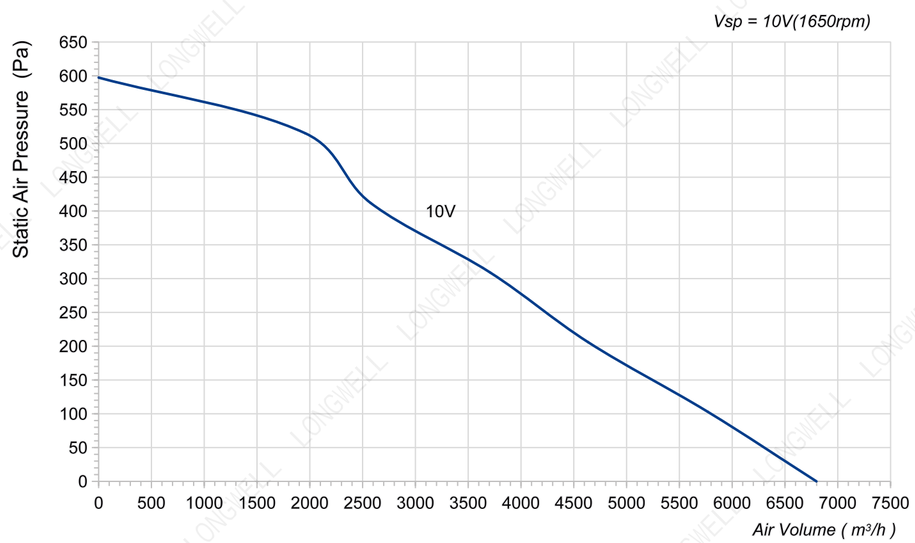

LWBE3G450-102NS-19 (without bracket)

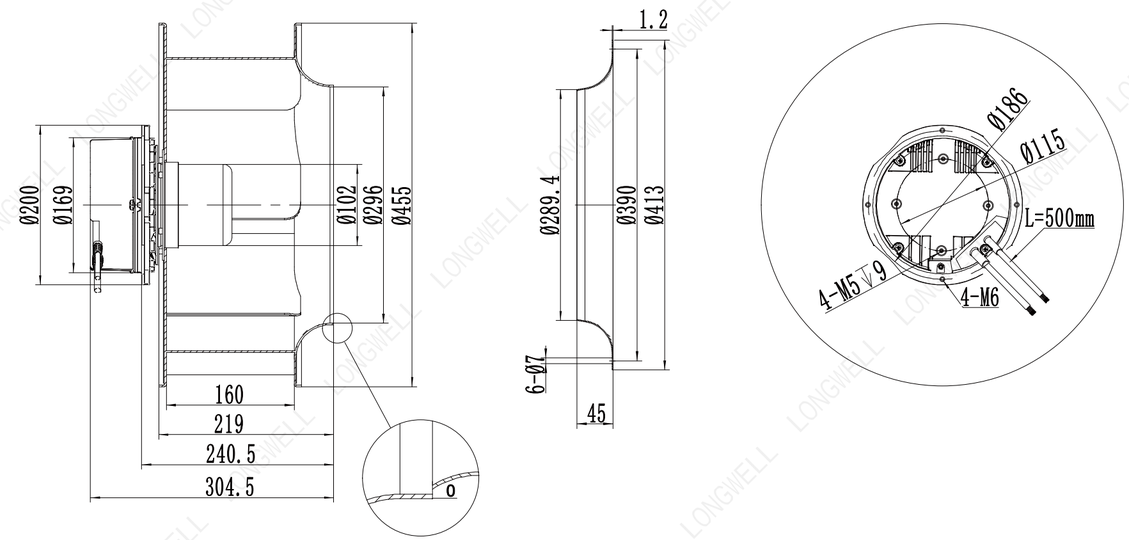

LWBE3G450-102PS-11 (with bracket)

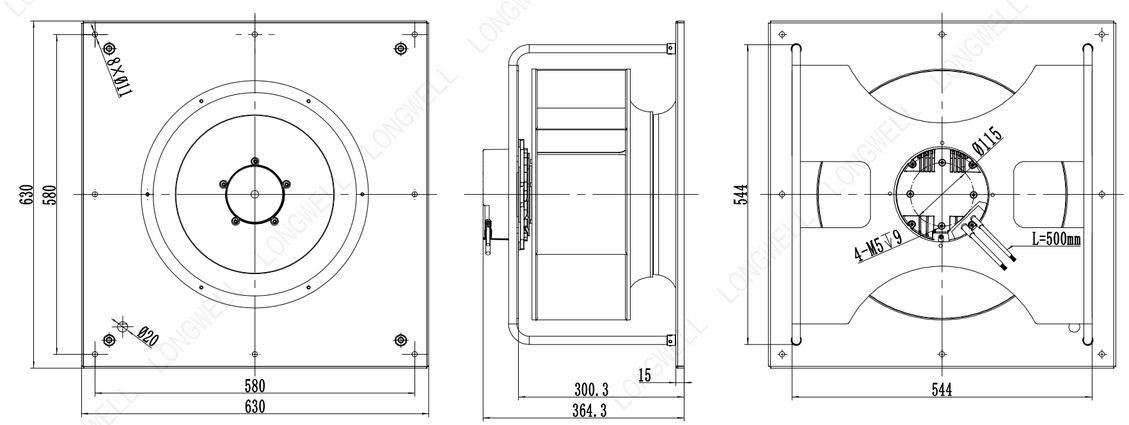

Ningbo Longwell Electric Technology CO, LTD
https://www.longwellfans.com Email:sales@zjlongwell.com

LWBE-450 Series

Product Characteristic

- Impeller Material: Aluminum Alloy
- Supply Voltage: 400V,50/60Hz
- Mode Of Operation: S1
- Protection Class: IP55
- Insulation Class: F
- Operation Temperature: -25℃～+60℃
- Techniacal Feature: Control input 0-10VDC/PWM,Tech output,Locked-Rotor protection,Reverse Polarity Over-voltage protection, Soft Start Protection.

Technical Specifications

Model	Voltage (V)	Input Power (W)	Current (A)	Air Volume (m^3/h)	Static Pressure (Pa)	Speed (RPM)	Noise [dB(A)]
LWBE3G450-102PT-06	400	950	1.5	6695	1009	1830	93

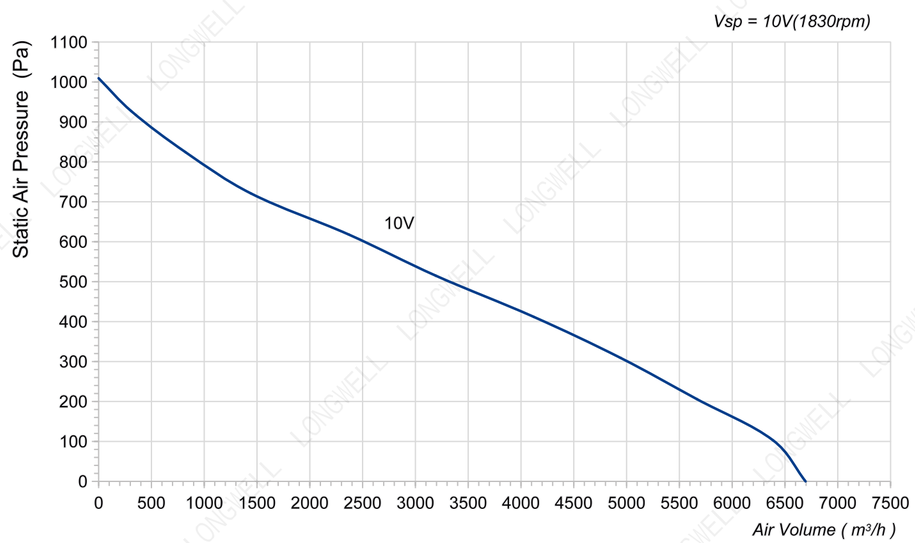

LWBE3G450-102NT-20 (without bracket)

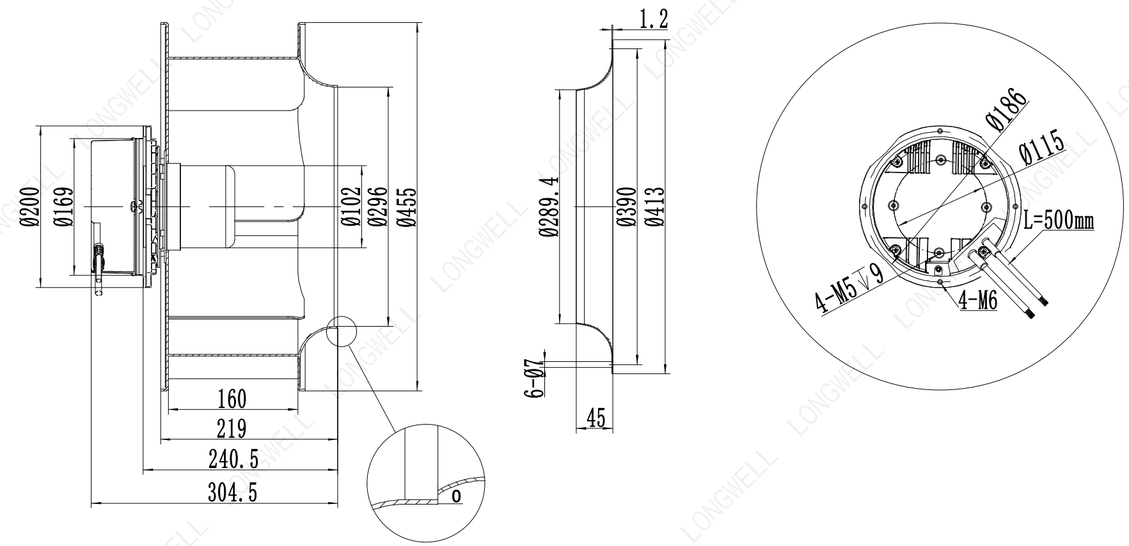

LWBE3G450-102PT-06 (with bracket)

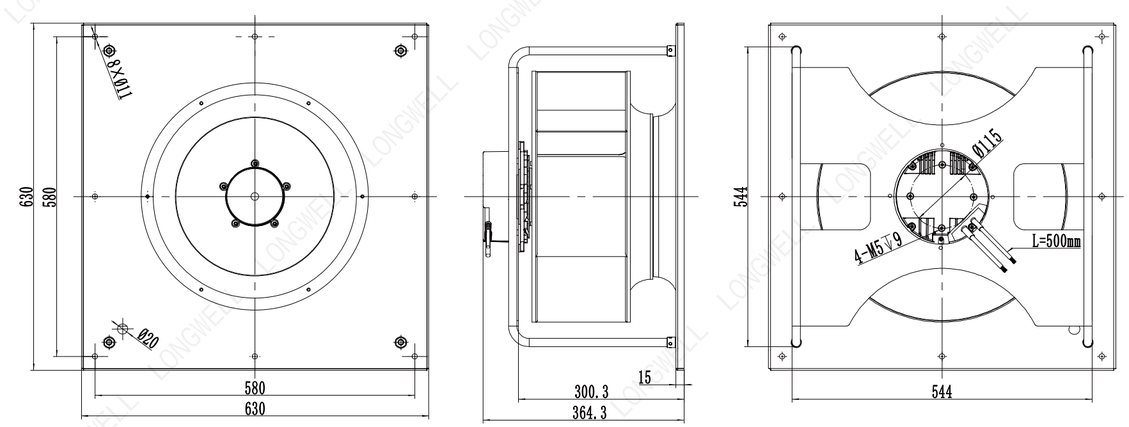

Ningbo Longwell Electric Technology CO, LTD
https://www.longwellfans.com Email:sales@zjlongwell.com

LWBE-450 Series

Product Characteristic

- Impeller Material: Aluminum Alloy
- Supply Voltage: 400V,50/60Hz
- Mode Of Operation: S1
- Protection Class: IP54
- Insulation Class: F
- Operation Temperature: -25℃～+60℃
- Techniacal Feature: Control input 0-10VDC/PWM,Tech output,Locked-Rotor protection,Reverse Polarity Over-voltage protection, Soft Start Protection.

Technical Specifications

Model	Voltage (V)	Input Power (W)	Current (A)	Air Volume (m³/h)	Static Pressure (Pa)	Speed (RPM)	Noise [dB(A)]
LWBE3G450-138PT-04	400	1350	3.4	7828	824	1720	/

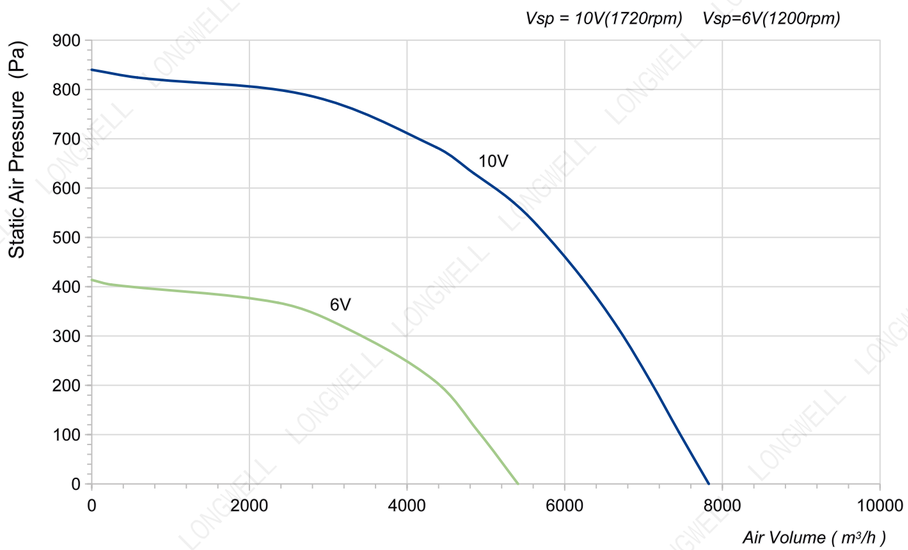

LWBE3G450-138NT-08 (without bracket)

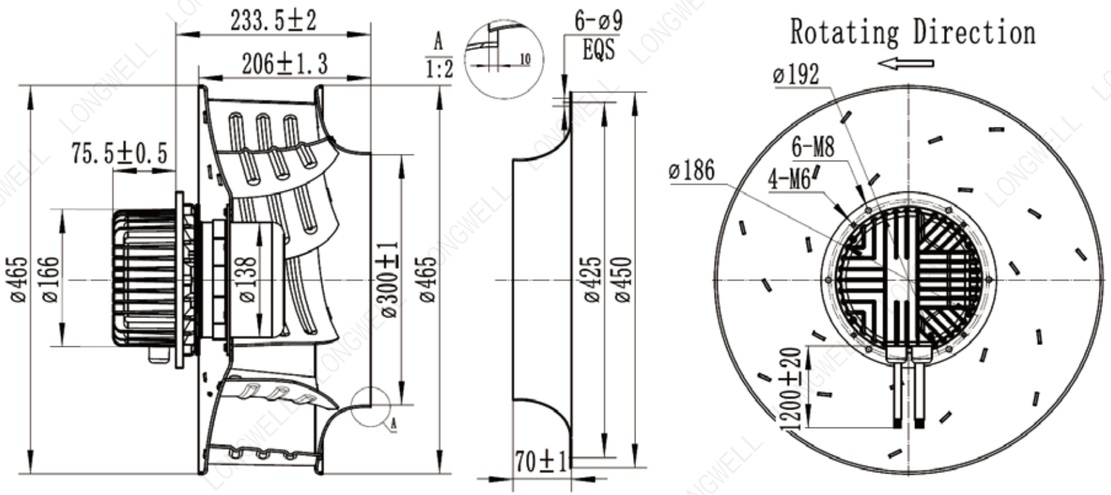

LWBE3G450-138PT-04 (with bracket)

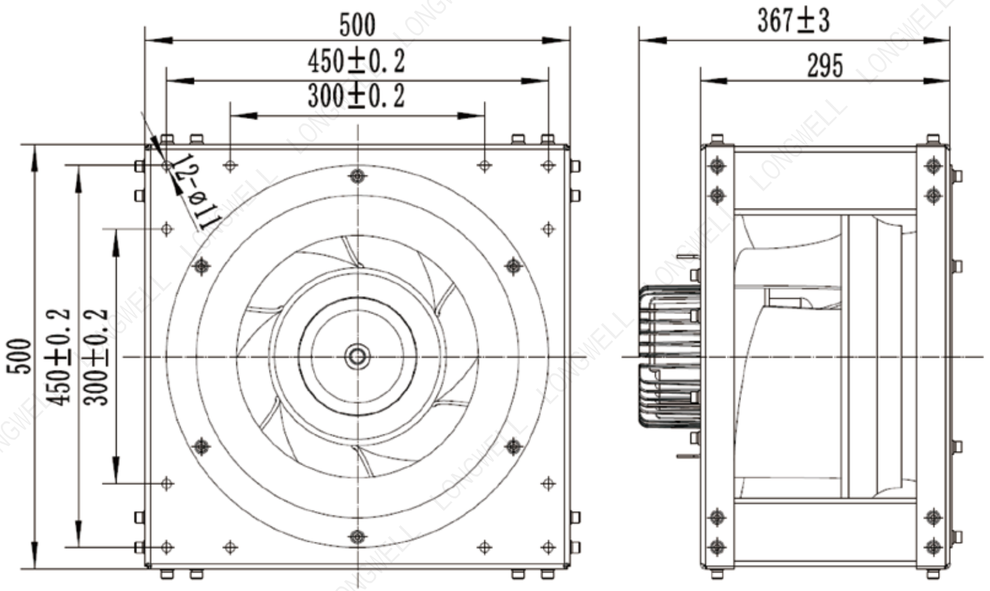

Ningbo Longwell Electric Technology CO, LTD
https://www.longwellfans.com Email:sales@zjlongwell.com

LWBE-450 Series

Product Characteristic

- Impeller Material: Aluminum Alloy
- Supply Voltage: 400V,50/60Hz
- Mode Of Operation: S1
- Protection Class: IP54
- Insulation Class: F
- Operation Temperature: -25℃～+60℃
- Techniacal Feature: Control input 0-10VDC/PWM,Tech output,Locked-Rotor protection,Reverse Polarity Over-voltage protection, Soft Start Protection.

Technical Specifications

Model	Voltage (V)	Input Power (W)	Current (A)	Air Volume (m³/h)	Static Pressure (Pa)	Speed (RPM)	Noise [dB(A)]
LWBE3G450-188PT-07	400	2740	3.45	7425	1568	2400	/

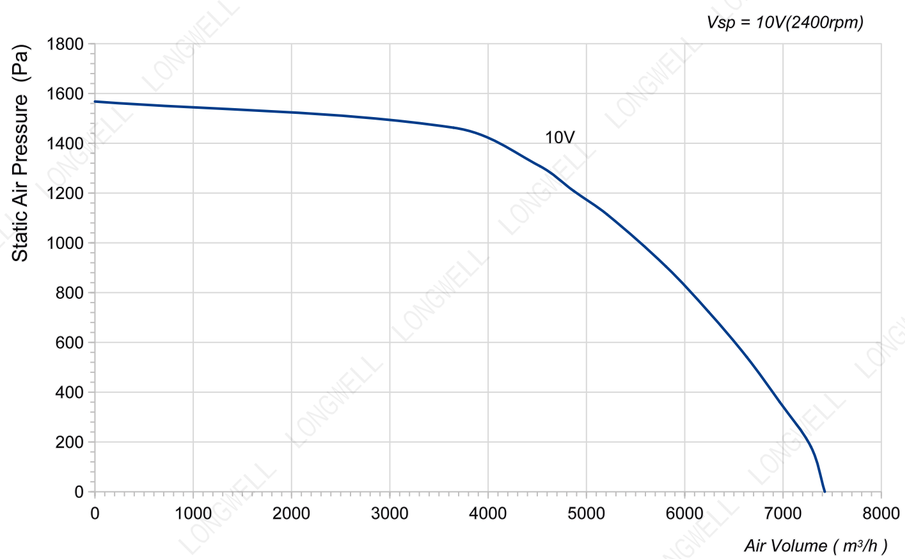

LWBE3G450-188NT-15 (without bracket)

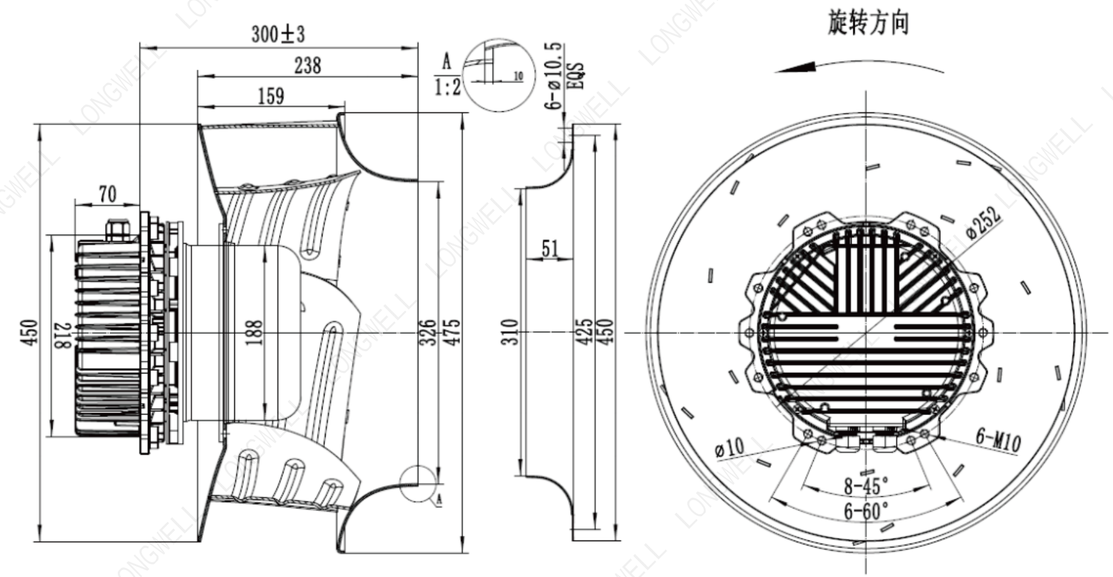

LWBE3G450-188PT-07 (with bracket)

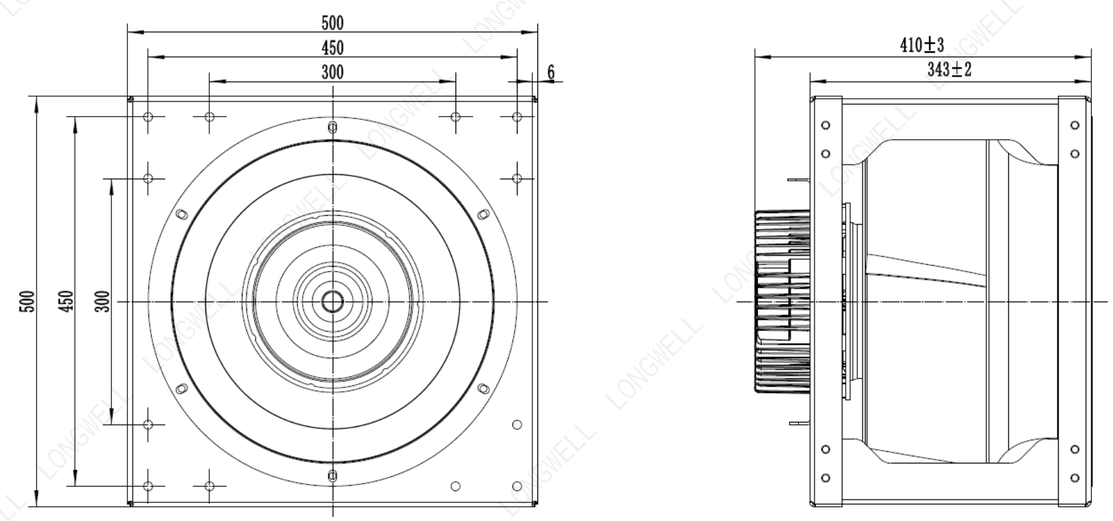

Ningbo Longwell Electric Technology CO, LTD
https://www.longwellfans.com Email:sales@zjlongwell.com

LWBE-450 Series

Product Characteristic

- Impeller Material: Aluminum Alloy
- Supply Voltage: 400V,50/60Hz
- Mode Of Operation: S1
- Protection Class: IP54
- Insulation Class: F
- Operation Temperature: -25℃～+60℃
- Techniacal Feature: Control input 0-10VDC/PWM,Tech output,Locked-Rotor protection,Reverse Polarity Over-voltage protection, Soft Start Protection.

Technical Specifications

Model	Voltage (V)	Input Power (W)	Current (A)	Air Volume (m³/h)	Static Pressure (Pa)	Speed (RPM)	Noise [dB(A)]
LWBE3G450-188PT-08	400	3270	4.2	8019	1802	2600	/

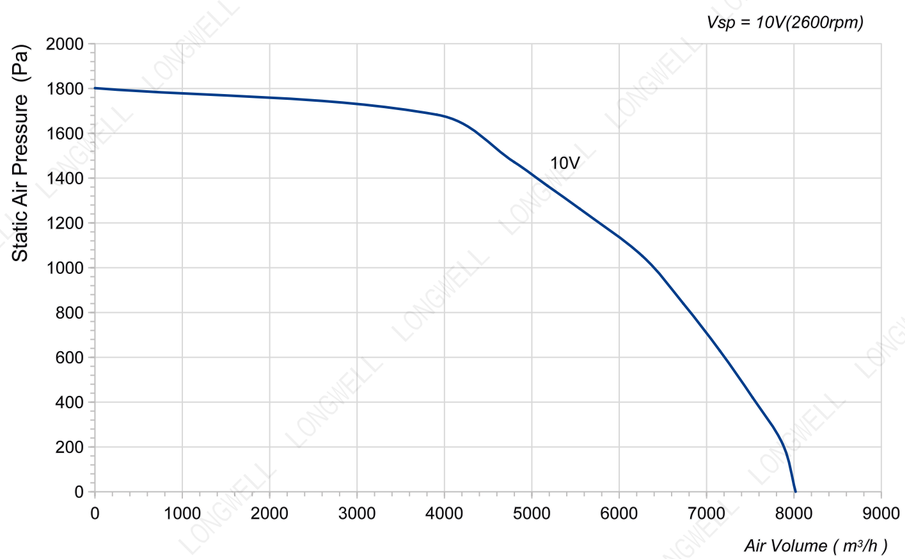

LWBE3G450-188NT-16 (without bracket)

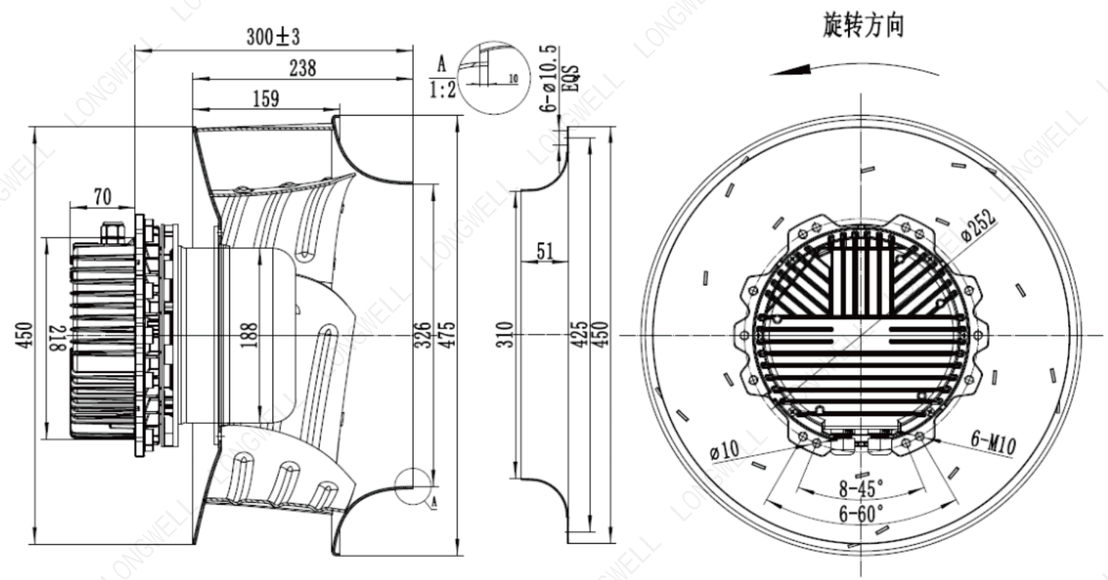

LWBE3G450-188PT-08 (with bracket)

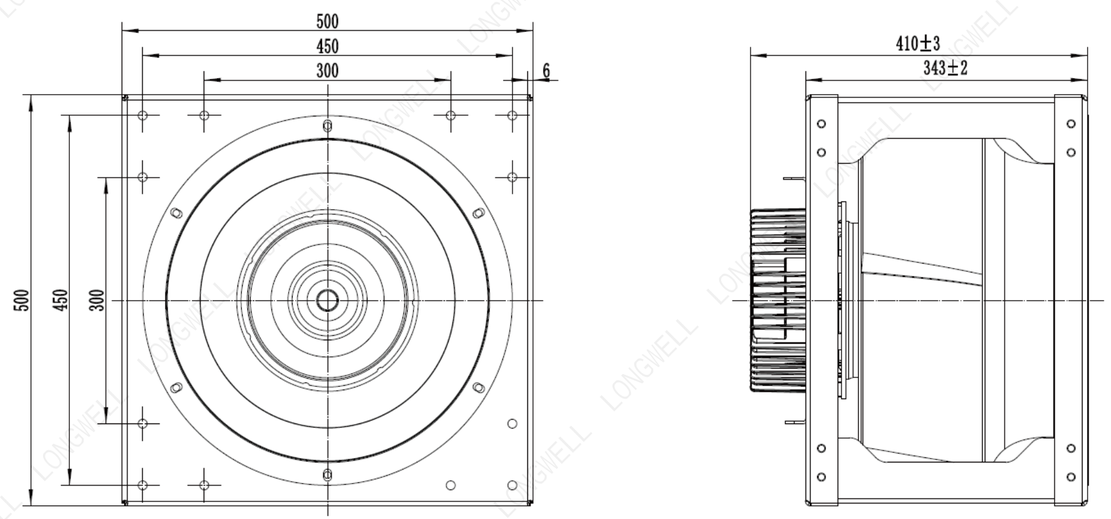

Ningbo Longwell Electric Technology CO, LTD
https://www.longwellfans.com Email:sales@zjlongwell.com

LWBE-450 Series

Product Characteristic

- Impeller Material: Aluminum Alloy
- Supply Voltage: 400V,50/60Hz
- Mode Of Operation: S1
- Protection Class: IP54
- Insulation Class: F
- Operation Temperature: -25℃～+60℃
- Techniacal Feature: Control input 0-10VDC/PWM,Tech output,Locked-Rotor protection,Reverse Polarity Over-voltage protection, Soft Start Protection.

Technical Specifications

Model	Voltage (V)	Input Power (W)	Current (A)	Air Volume (m³/h)	Static Pressure (Pa)	Speed (RPM)	Noise [dB(A)]
LWBE3G450-188PT-09	400	4301	5.3	8661	2114	2800	/

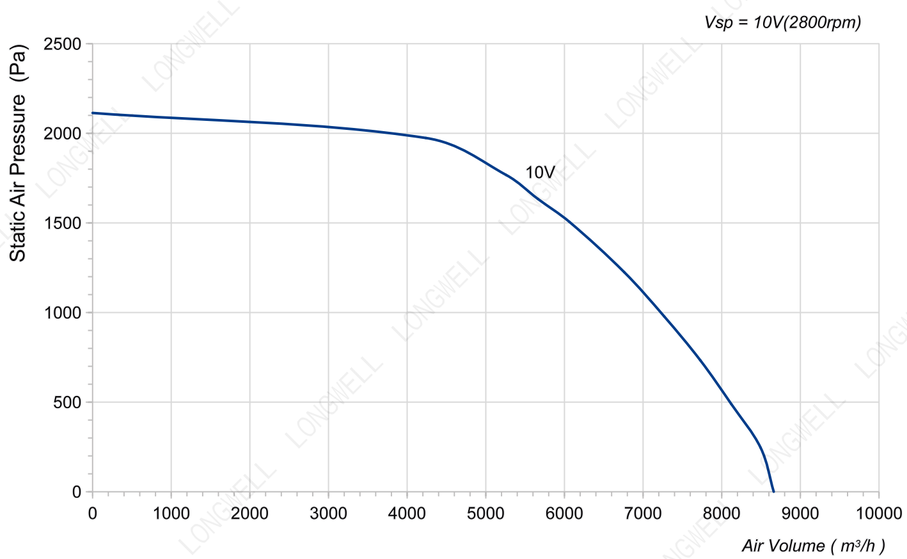

LWBE3G450-188NT-17 (without bracket)

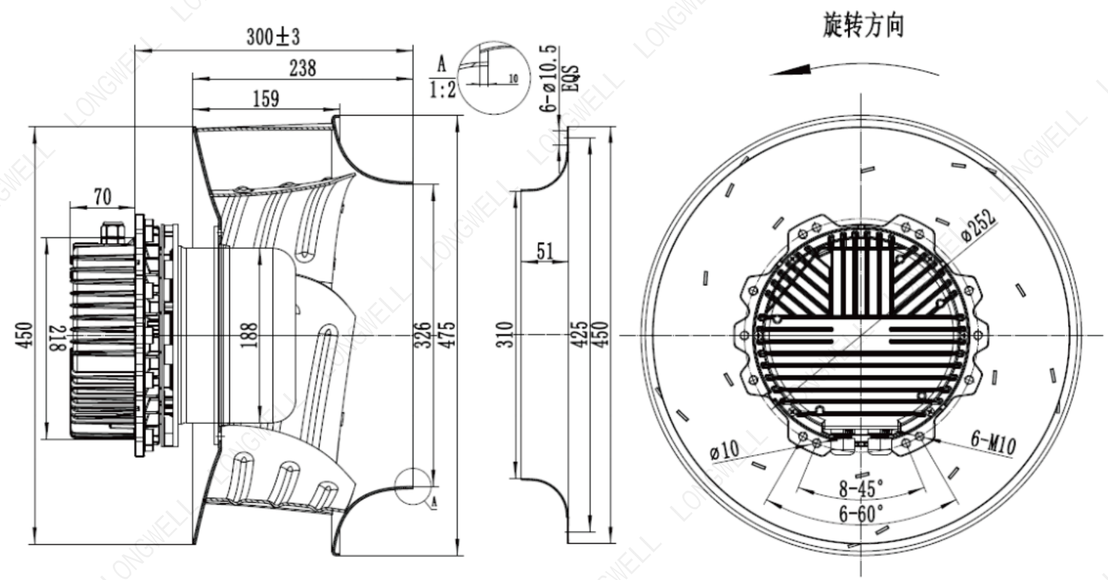

LWBE3G450-188PT-09 (with bracket)

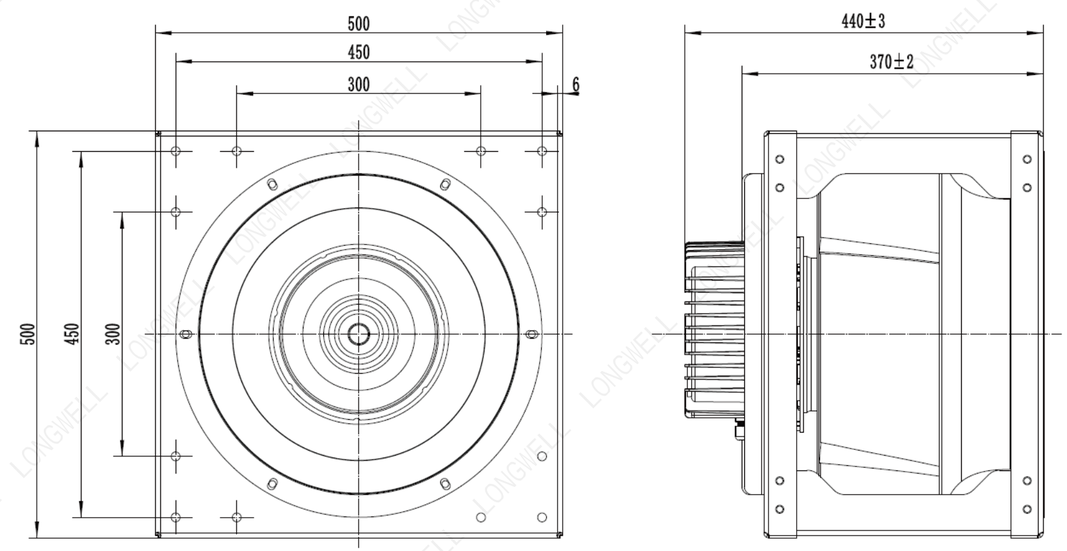

Ningbo Longwell Electric Technology CO, LTD
https://www.longwellfans.com Email:sales@zjlongwell.com

LWBE-500 Series

Product Characteristic

- Impeller Material: Aluminum Alloy
- Supply Voltage: 400V,50/60Hz
- Mode Of Operation: S1
- Protection Class: IP54
- Insulation Class: F
- Operation Temperature: -25℃～+60℃
- Techniacal Feature: Control input 0-10VDC/PWM,Tech output,Locked-Rotor protection,Reverse Polarity Over-voltage protection, Soft Start Protection.

Technical Specifications

Model	Voltage (V)	Input Power (W)	Current (A)	Air Volume (m³/h)	Static Pressure (Pa)	Speed (RPM)	Noise [dB(A)]
LWBE3G500-188PT-07	400	2400	4.9	10305	903	1705	/

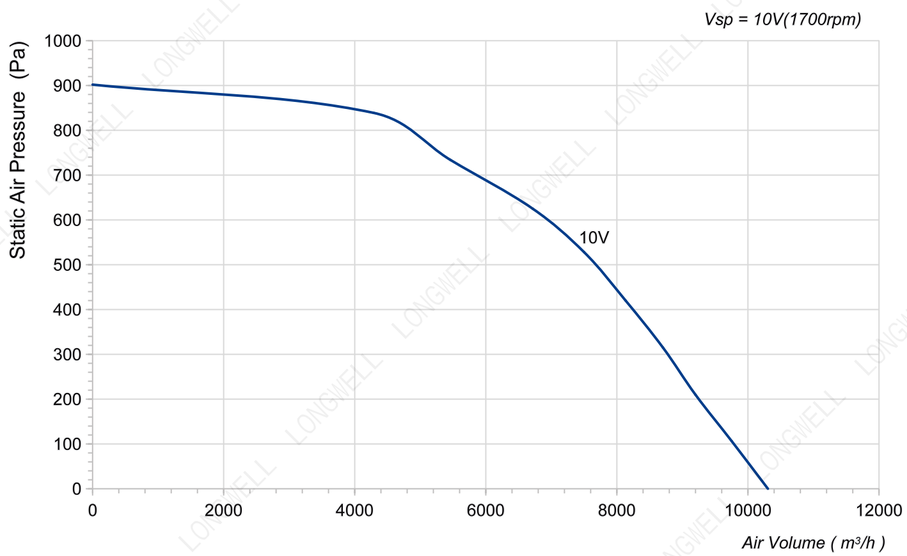

LWBE3G500-188NT-14 (without bracket)

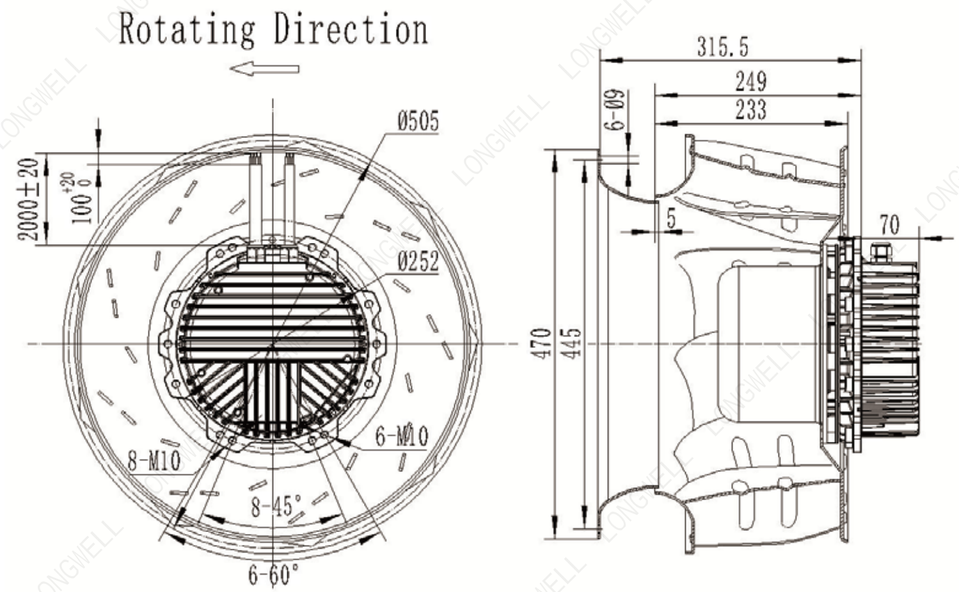

LWBE3G500-188PT-07 (with bracket)

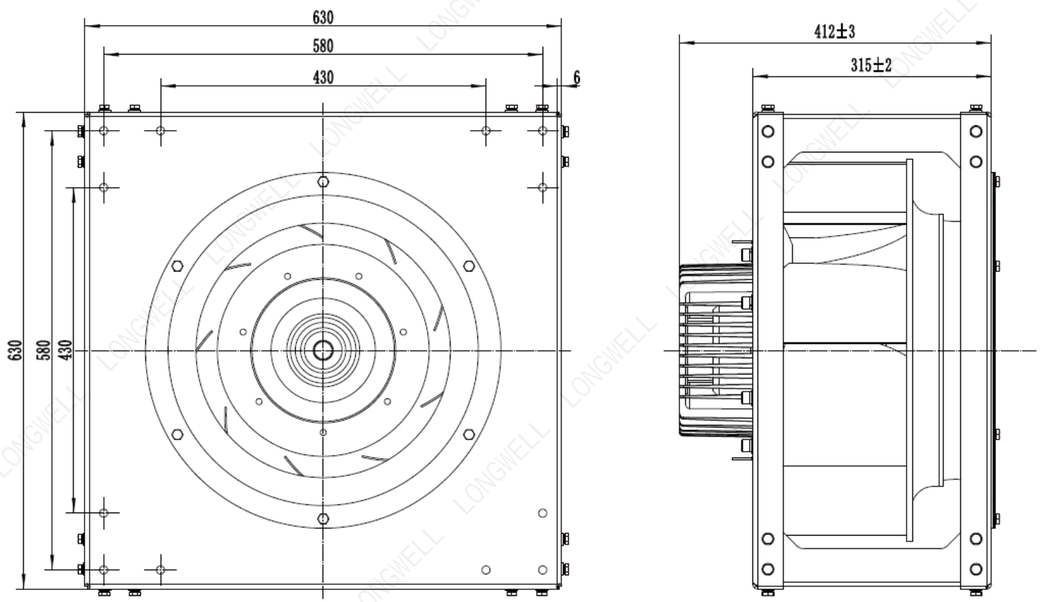

Ningbo Longwell Electric Technology CO, LTD
https://www.longwellfans.com Email:sales@zjlongwell.com

LWBE-500 Series

Product Characteristic

- Impeller Material: Aluminum Alloy
- Supply Voltage: 400V,50/60Hz
- Mode Of Operation: S1
- Protection Class: IP54
- Insulation Class: F
- Operation Temperature: -25℃～+60℃
- Techniacal Feature: Control input 0-10VDC/PWM,Tech output,Locked-Rotor protection,Reverse Polarity Over-voltage protection, Soft Start Protection.

Technical Specifications

Model	Voltage (V)	Input Power (W)	Current (A)	Air Volume (m³/h)	Static Pressure (Pa)	Speed (RPM)	Noise [dB(A)]
LWBE3G500-188PT-04	400	3000	4.95	14214	886	1800	89

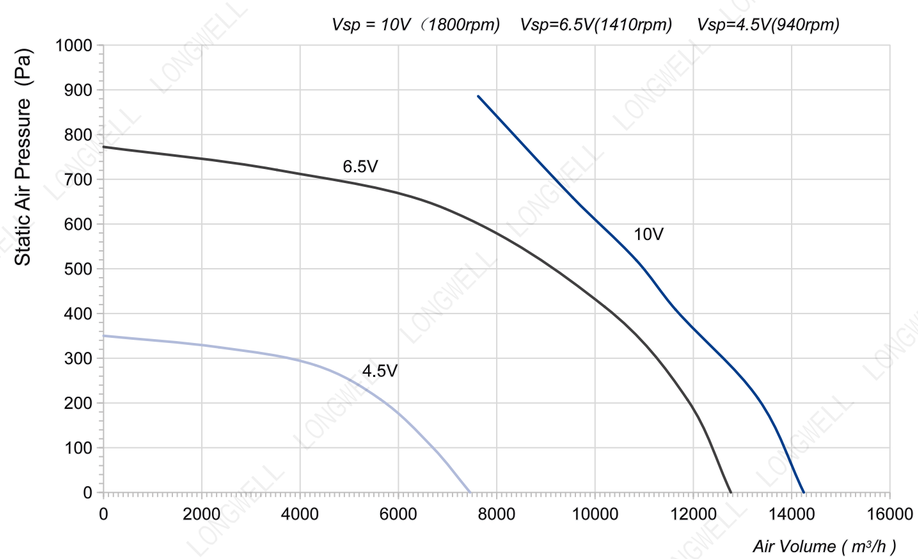

LWBE3G500-188NT-08 (without bracket)

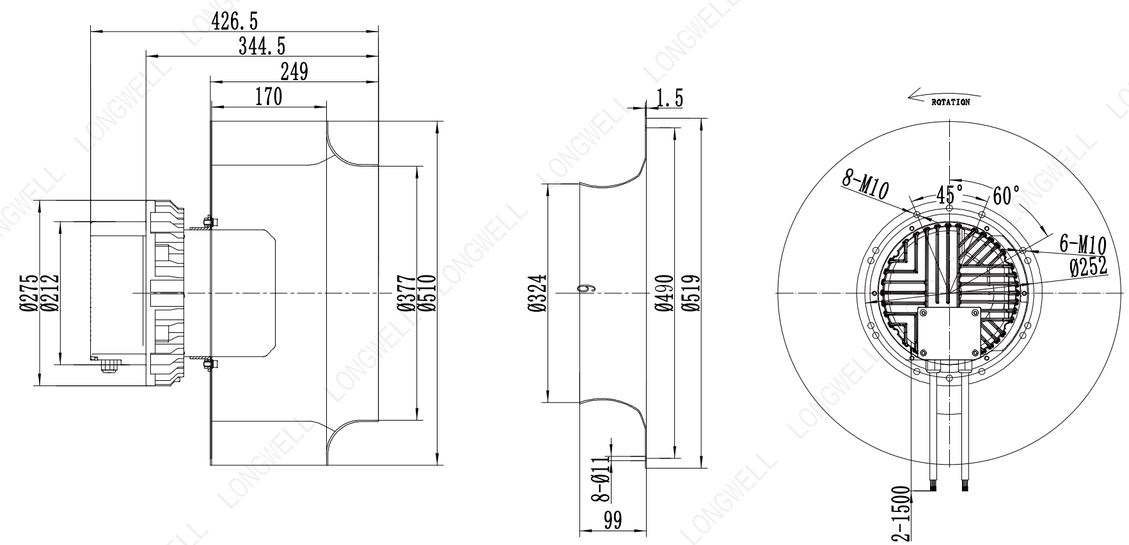

LWBE3G500-188PT-04 (with bracket)

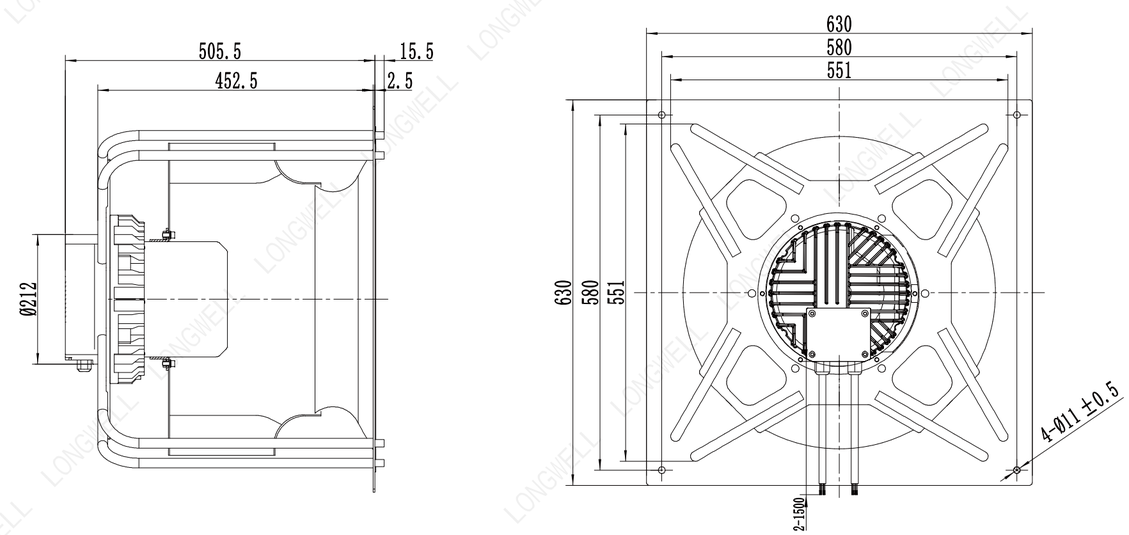

Ningbo Longwell Electric Technology CO, LTD
https://www.longwellfans.com Email:sales@zjlongwell.com

LWBE-500 Series

Product Characteristic

- Impeller Material: Aluminum Alloy
- Supply Voltage: 400V,50/60Hz
- Mode Of Operation: S1
- Protection Class: IP54
- Insulation Class: F
- Operation Temperature: -25℃～+60℃
- Techniacal Feature: Control input 0-10VDC/PWM,Tech output,Locked-Rotor protection,Reverse Polarity Over-voltage protection, Soft Start Protection.

Technical Specifications

Model	Voltage (V)	Input Power (W)	Current (A)	Air Volume (m³/h)	Static Pressure (Pa)	Speed (RPM)	Noise [dB(A)]
LWBE3G500-188PT-02	400	3955	8.6	12243	1265	2000	/

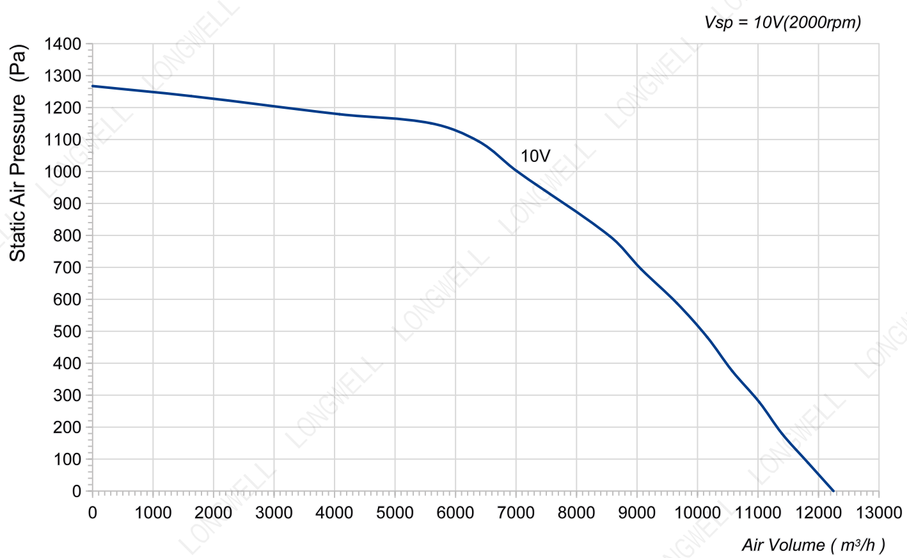

LWBE3G500-188NT-09 (without bracket)

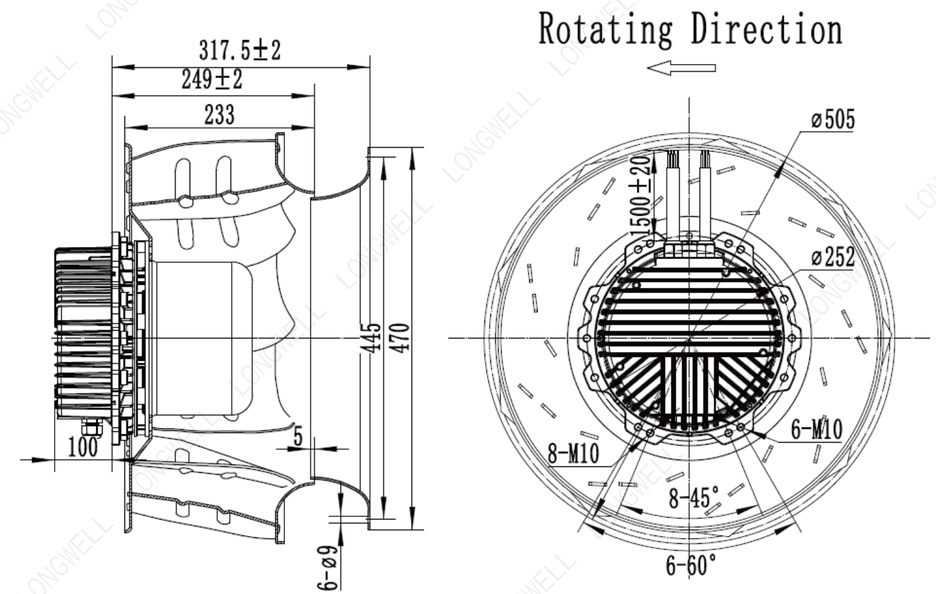

LWBE3G500-188PT-02 (with bracket)

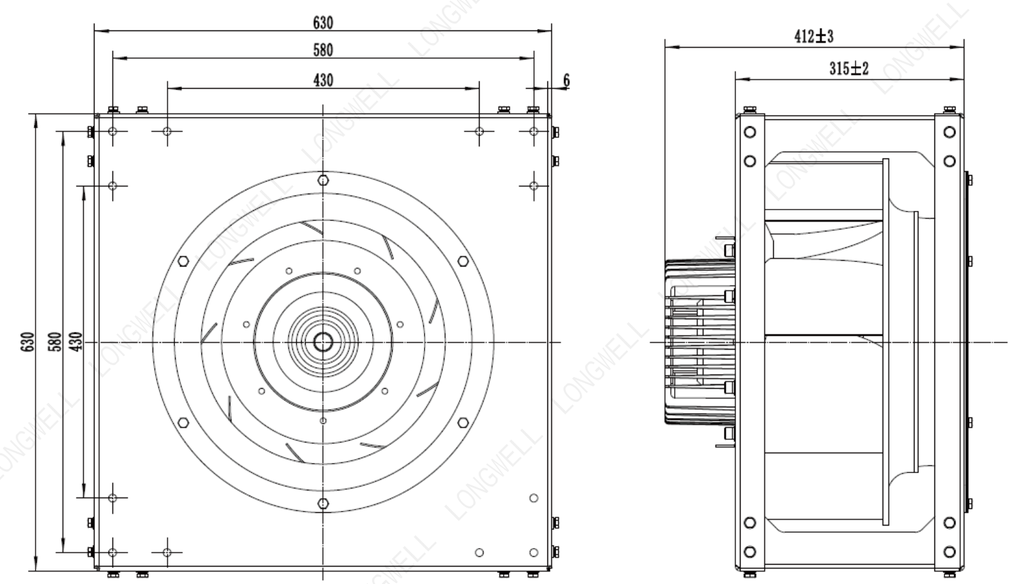

Ningbo Longwell Electric Technology CO, LTD
https://www.longwellfans.com Email:sales@zjlongwell.com

LWBE-500 Series

Product Characteristic

- Impeller Material: Aluminum Alloy
- Supply Voltage: 400V,50/60Hz
- Mode Of Operation: S1
- Protection Class: IP54
- Insulation Class: F
- Operation Temperature: -25℃～+60℃
- Techniacal Feature: Control input 0-10VDC/PWM,Tech output,Locked-Rotor protection,Reverse Polarity Over-voltage protection, Soft Start Protection.

Technical Specifications

Model	Voltage (V)	Input Power (W)	Current (A)	Air Volume (m³/h)	Static Pressure (Pa)	Speed (RPM)	Noise [dB(A)]
LWBE3G500-188PT-05	400	4270	9.3	13472	1541	2200	/

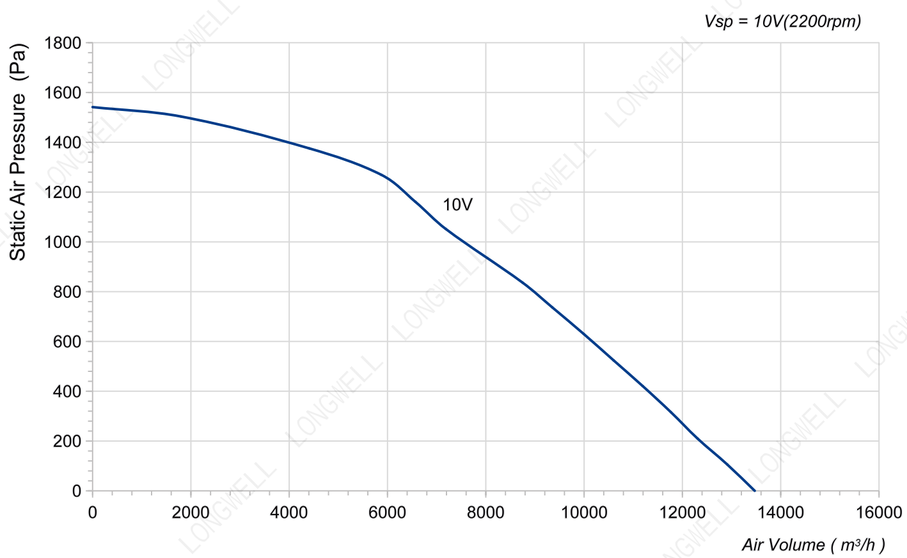

LWBE3G500-188NT-10 (without bracket)

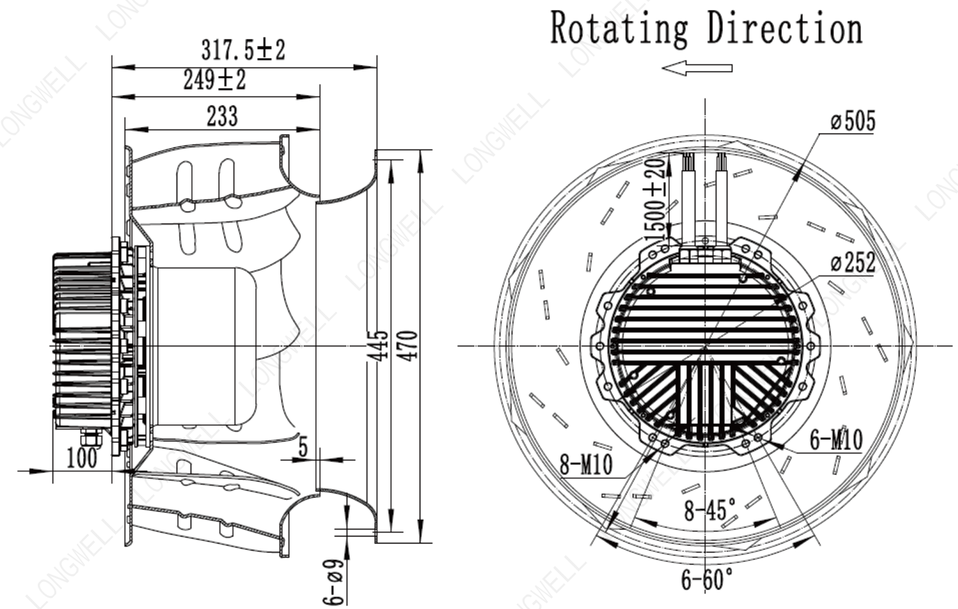

LWBE3G500-188PT-05 (with bracket)

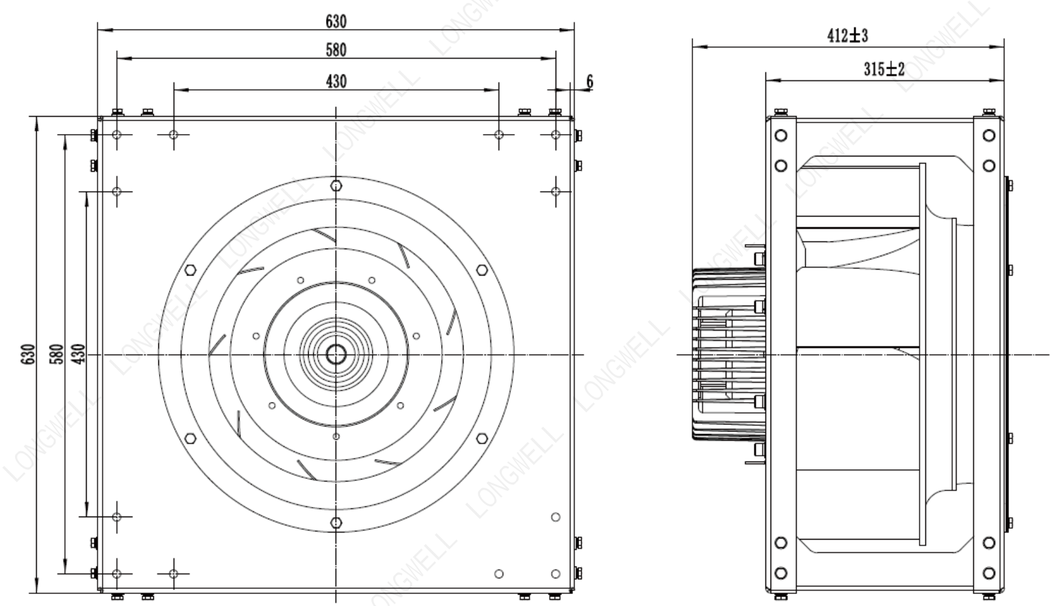

Ningbo Longwell Electric Technology CO, LTD
https://www.longwellfans.com Email:sales@zjlongwell.com

LWBE-560 Series

Product Characteristic

- Impeller Material: Aluminum Alloy
- Supply Voltage: 400V,50/60Hz
- Mode Of Operation: S1
- Protection Class: IP54
- Insulation Class: F
- Operation Temperature: -25℃～+60℃
- Techniacal Feature: Control input 0-10VDC/PWM,Tech output,Locked-Rotor protection,Reverse Polarity Over-voltage protection, Soft Start Protection.

Technical Specifications

Model	Voltage (V)	Input Power (W)	Current (A)	Air Volume (m³/h)	Static Pressure (Pa)	Speed (RPM)	Noise [dB(A)]
LWBE3G560-188PT-02	400	2770	4.4	16480	886	1520	81

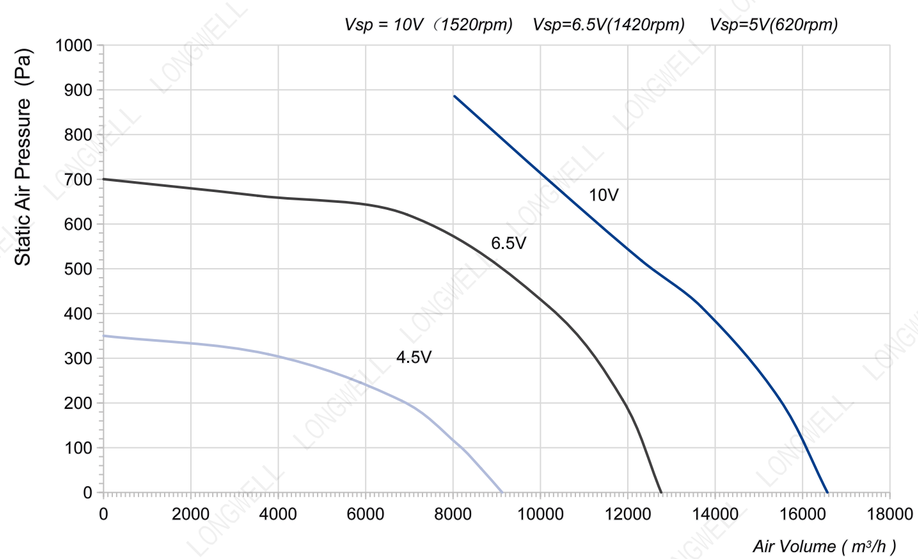

LWBE3G560-188NT-09 (without bracket)

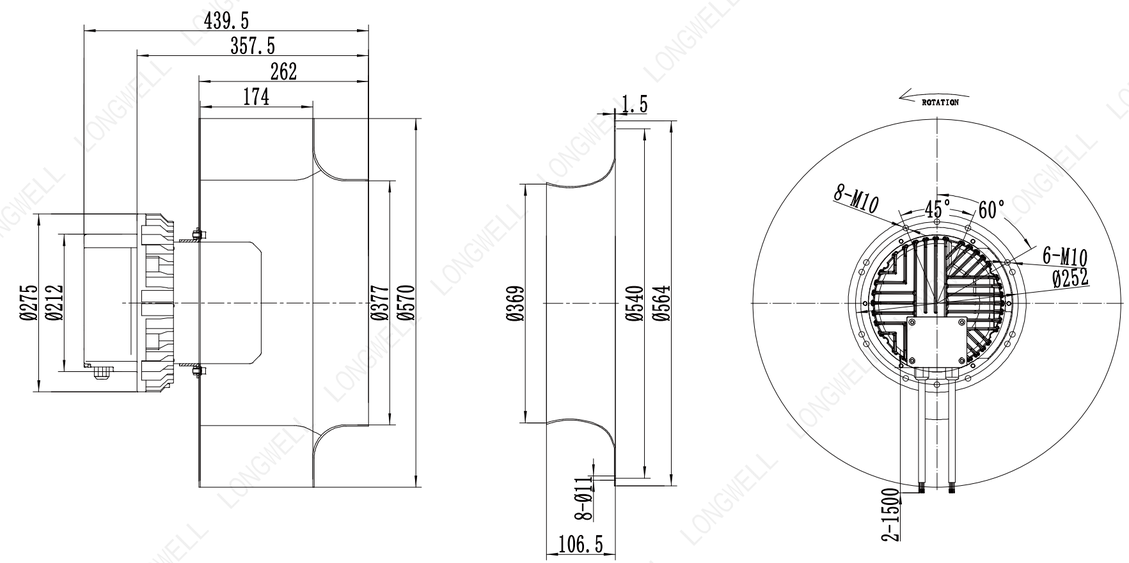

LWBE3G560-188PT-02 (with bracket)

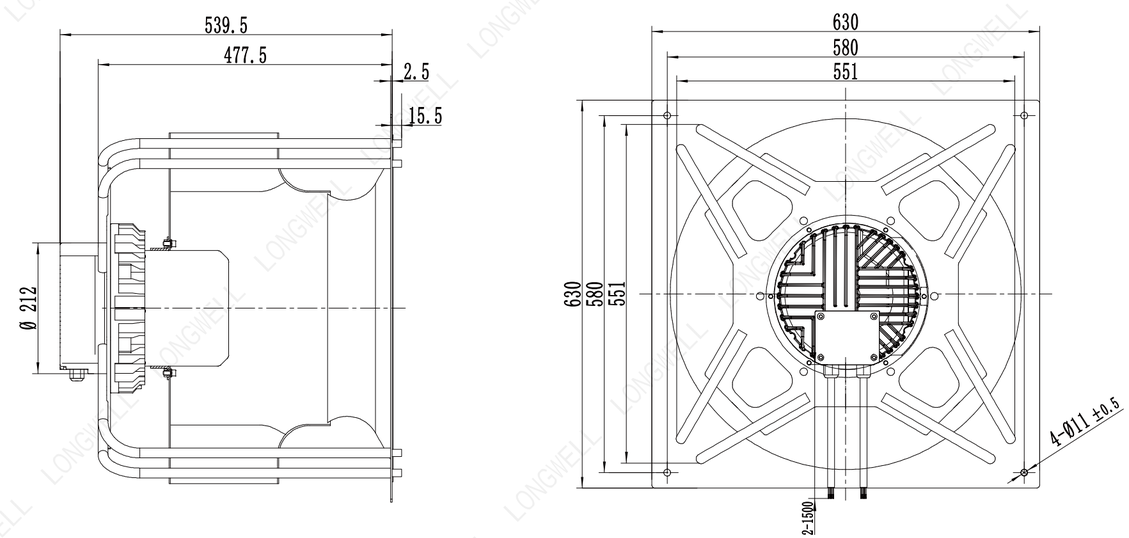

Ningbo Longwell Electric Technology CO, LTD
https://www.longwellfans.com Email:sales@zjlongwell.com

LWBE-560 Series

Product Characteristic

- Impeller Material: Aluminum Alloy
- Supply Voltage: 400V,50/60Hz
- Mode Of Operation: S1
- Protection Class: IP54
- Insulation Class: F
- Operation Temperature: -25℃～+60℃
- Techniacal Feature: Control input 0-10VDC/PWM,Tech output,Locked-Rotor protection,Reverse Polarity Over-voltage protection, Soft Start Protection.

Technical Specifications

Model	Voltage (V)	Input Power (W)	Current (A)	Air Volume (m³/h)	Static Pressure (Pa)	Speed (RPM)	Noise [dB(A)]
LWBE3G560-188PT-03	400	3000	6.5	14879	1013	1500	/

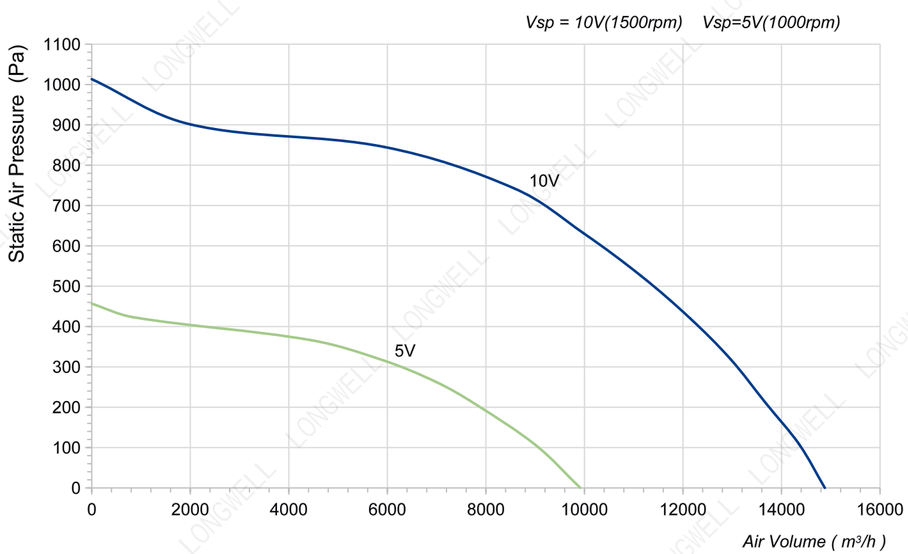

LWBE3G560-188NT-10 (without bracket)

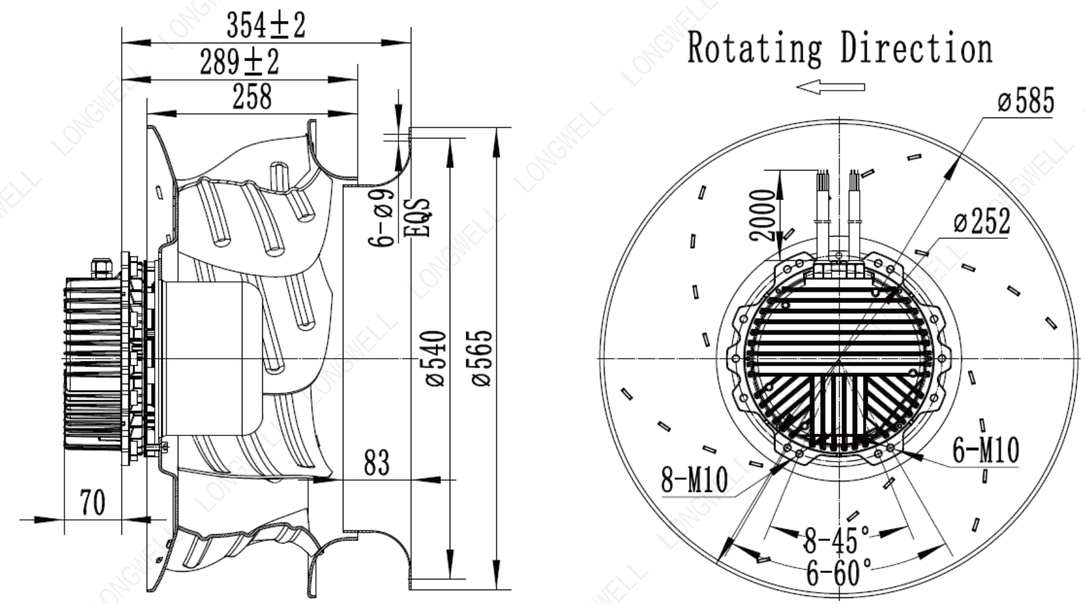

LWBE3G560-188PT-03 (with bracket)

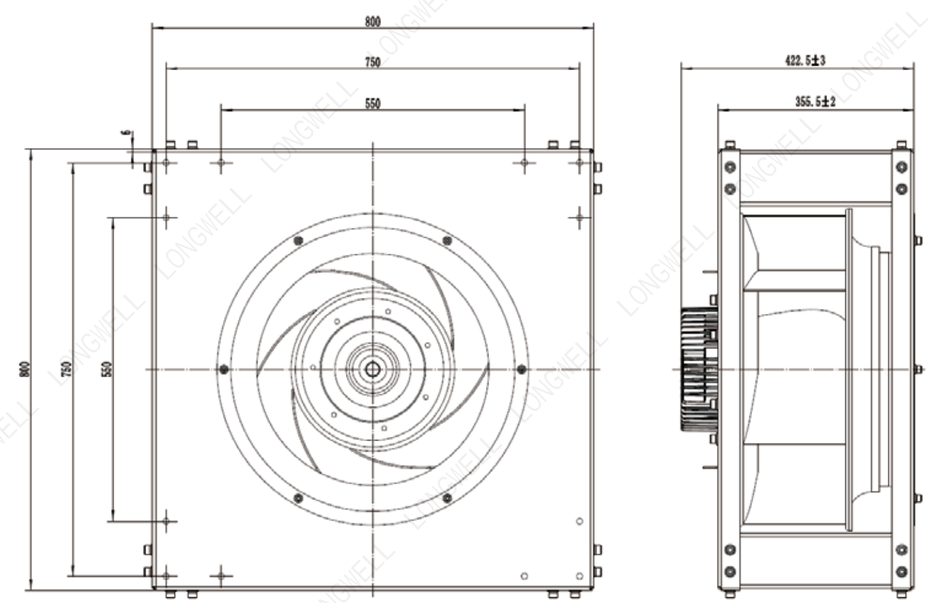

Ningbo Longwell Electric Technology CO, LTD
https://www.longwellfans.com Email:sales@zjlongwell.com

LWBE-560 Series

Product Characteristic

- Impeller Material: Aluminum Alloy
- Supply Voltage: 400V,50/60Hz
- Mode Of Operation: S1
- Protection Class: IP54
- Insulation Class: F
- Operation Temperature: -25℃～+60℃
- Techniacal Feature: Control input 0-10VDC/PWM,Tech output,Locked-Rotor protection,Reverse Polarity Over-voltage protection, Soft Start Protection.

Technical Specifications

Model	Voltage (V)	Input Power (W)	Current (A)	Air Volume (m³/h)	Static Pressure (Pa)	Speed (RPM)	Noise [dB(A)]
LWBE3G560-188PT-01	400	3665	8	16039	1166	1610	/

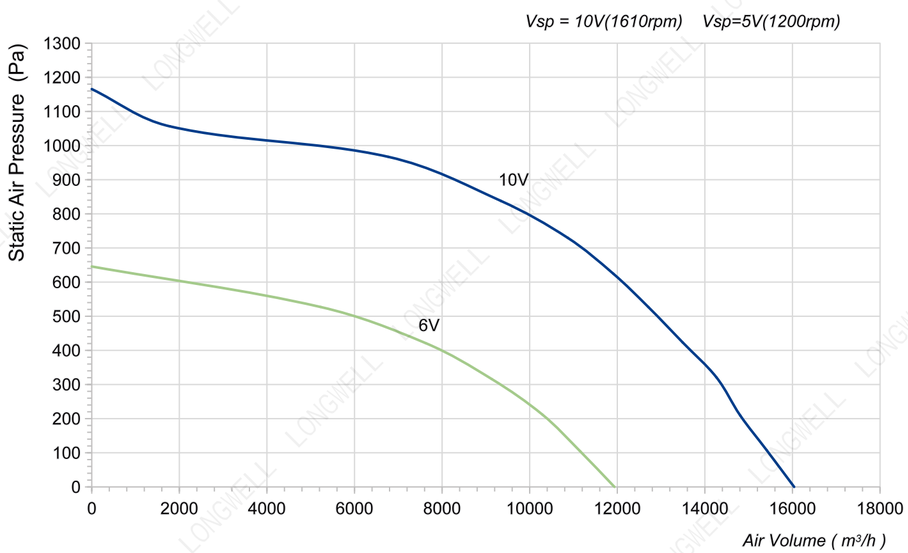

LWBE3G560-188NT-01 (without bracket)

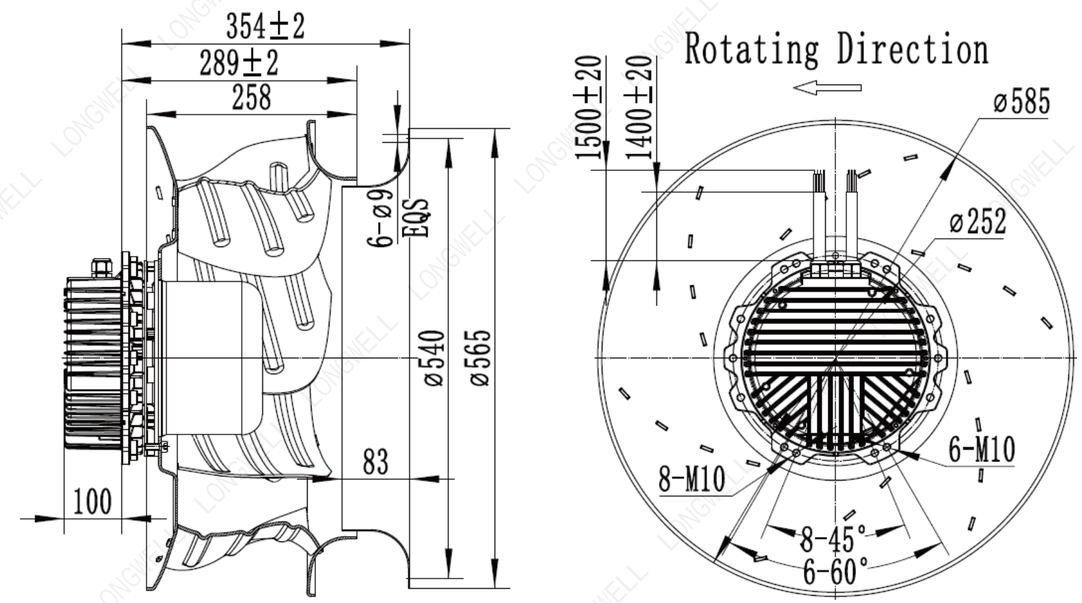

LWBE3G560-188PT-01 (with bracket)

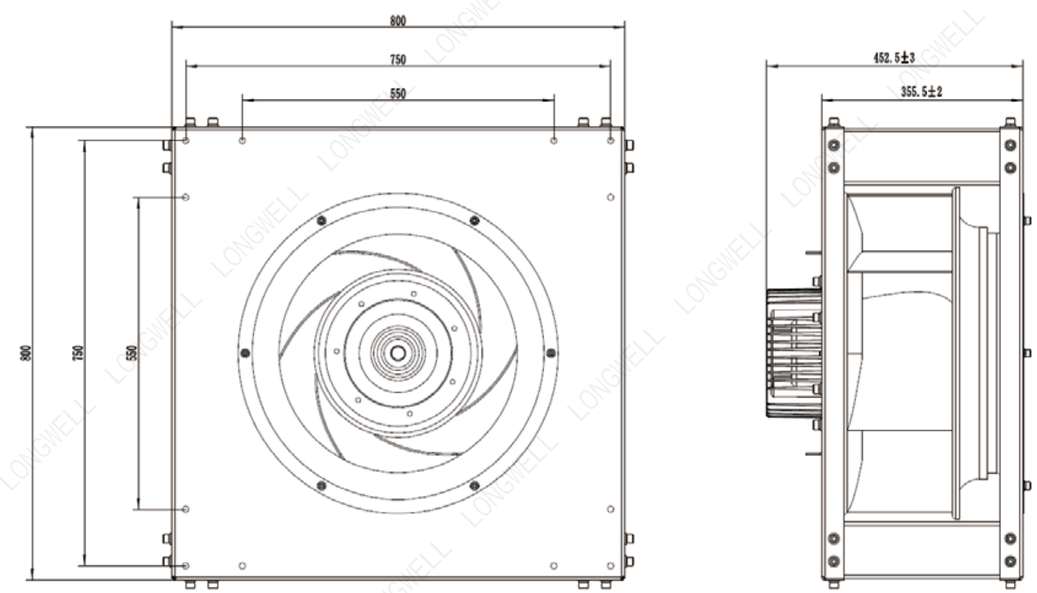

Ningbo Longwell Electric Technology CO, LTD
https://www.longwellfans.com Email:sales@zjlongwell.com

LWBE-560 Series

Product Characteristic

- Impeller Material: Aluminum Alloy
- Supply Voltage: 400V,50/60Hz
- Mode Of Operation: S1
- Protection Class: IP54
- Insulation Class: F
- Operation Temperature: -25℃～+60℃
- Techniacal Feature: Control input 0-10VDC/PWM,Tech output,Locked-Rotor protection,Reverse Polarity Over-voltage protection, Soft Start Protection.

Technical Specifications

Model	Voltage (V)	Input Power (W)	Current (A)	Air Volume (m³/h)	Static Pressure (Pa)	Speed (RPM)	Noise [dB(A)]
LWBE3G560-218PT-06	400	5955	9.5	23896	1442	1810	/

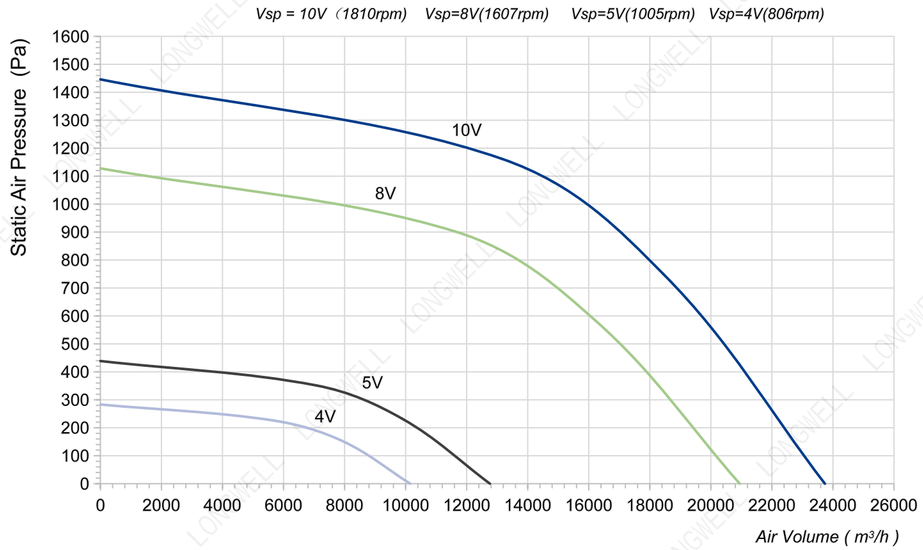

LWBE3G560-218NT-13 (without bracket)

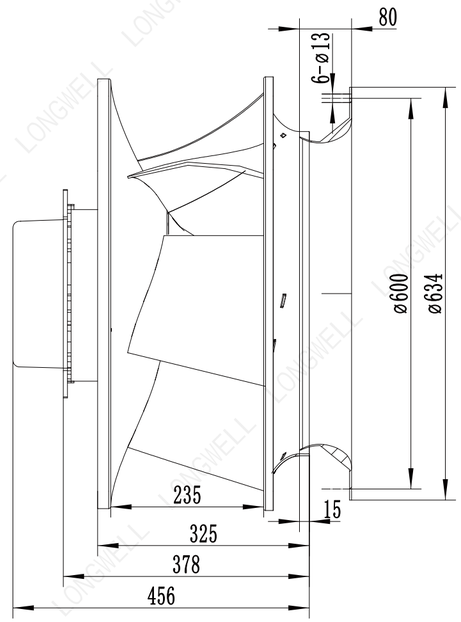

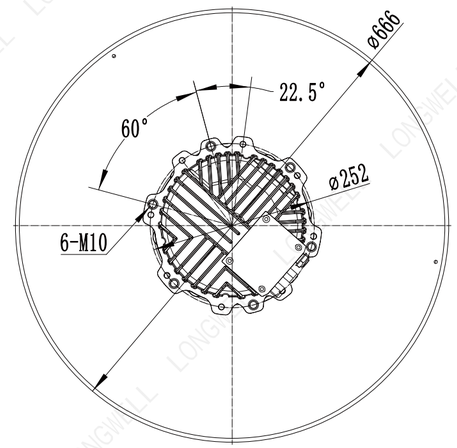

LWBE3G560-218PT-06 (with bracket)

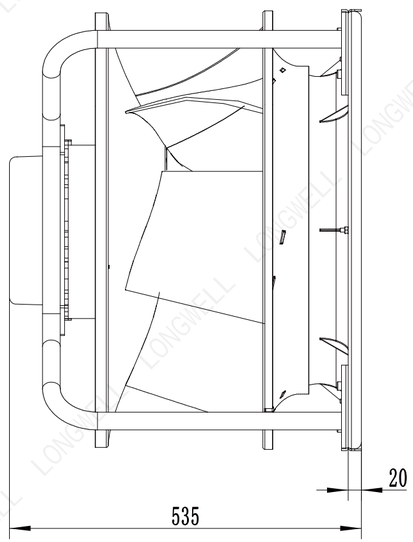

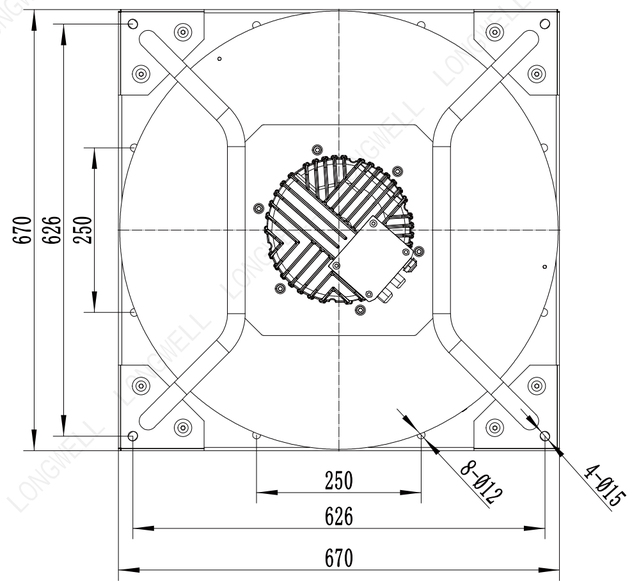

Ningbo Longwell Electric Technology CO, LTD
https://www.longwellfans.com Email:sales@zjlongwell.com

LWBE-630 Series

Product Characteristic

- Impeller Material: Aluminum Alloy
- Supply Voltage: 400V,50/60Hz
- Mode Of Operation: S1
- Protection Class: IP54
- Insulation Class: F
- Operation Temperature: -25℃～+60℃
- Techniacal Feature: Control input 0-10VDC/PWM,Tech output,Locked-Rotor protection,Reverse Polarity Over-voltage protection, Soft Start Protection.

Technical Specifications

Model	Voltage (V)	Input Power (W)	Current (A)	Air Volume (m³/h)	Static Pressure (Pa)	Speed (RPM)	Noise [dB(A)]
LWBE3G630-188PT-01	400	2975	6.5	19247	887	1300	/

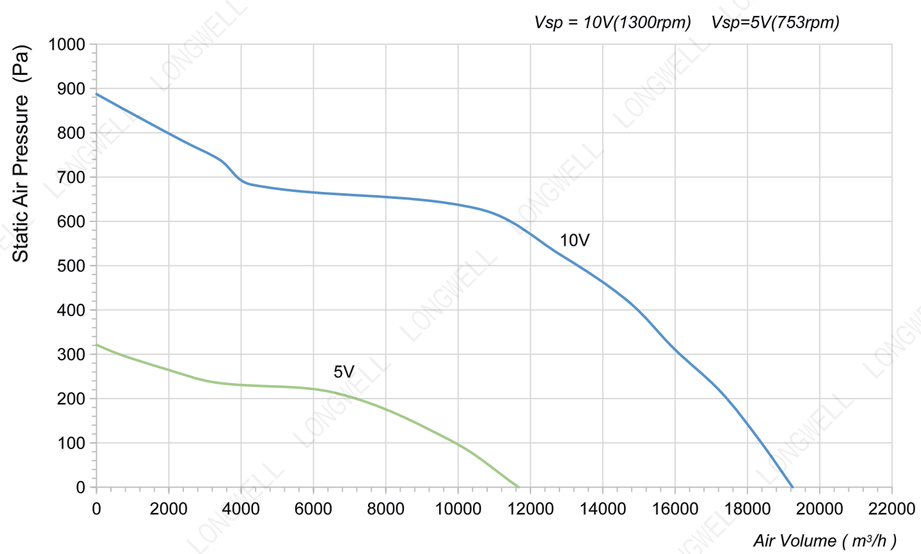

LWBE3G630-188NT-06 (without bracket)

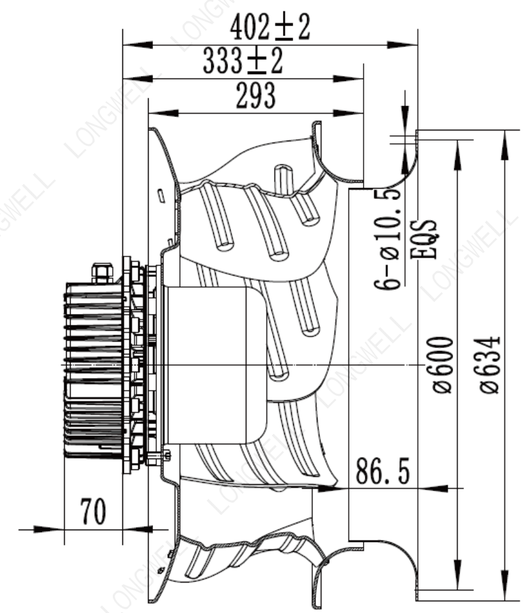

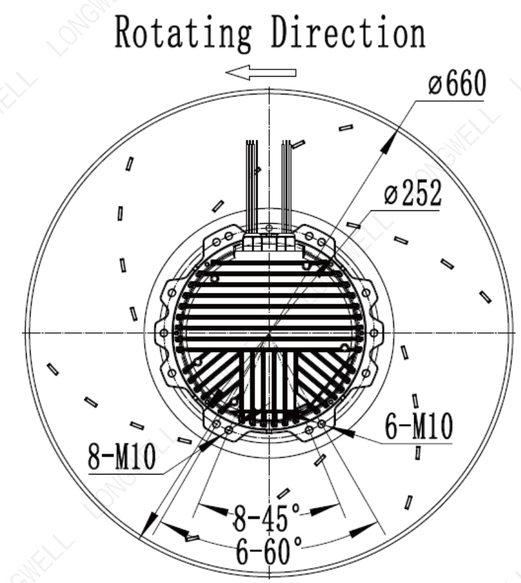

LWBE3G630-188PT-01 (with bracket)

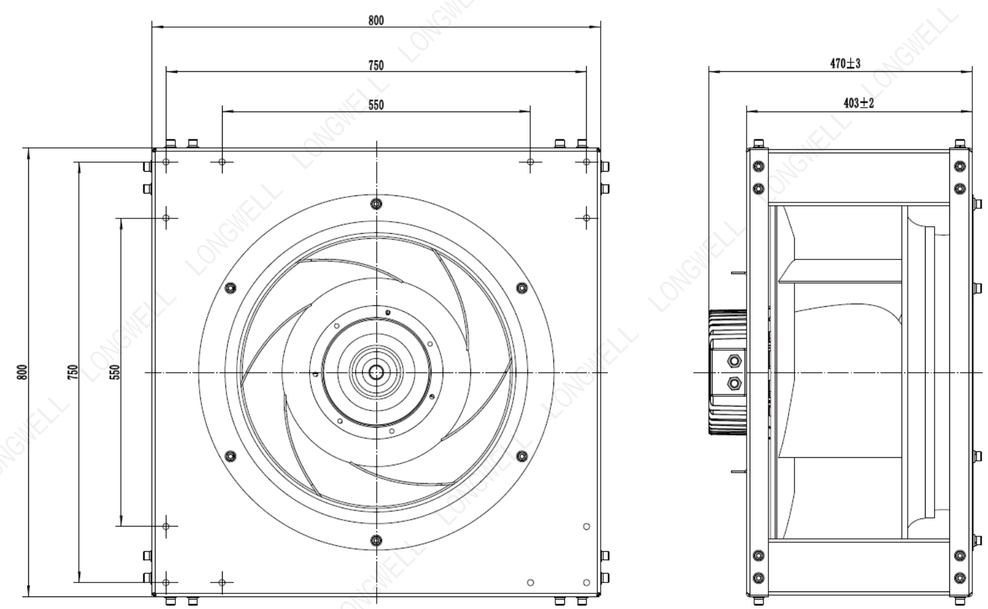

Ningbo Longwell Electric Technology CO, LTD
https://www.longwellfans.com Email:sales@zjlongwell.com

LWBE-630 Series

Product Characteristic

- Impeller Material: Aluminum Alloy
- Supply Voltage: 400V,50/60Hz
- Mode Of Operation: S1
- Protection Class: IP54
- Insulation Class: F
- Operation Temperature: -25℃～+60℃
- Techniacal Feature: Control input 0-10VDC/PWM,Tech output,Locked-Rotor protection,Reverse Polarity Over-voltage protection, Soft Start Protection.

Technical Specifications

Model	Voltage (V)	Input Power (W)	Current (A)	Air Volume (m³/h)	Static Pressure (Pa)	Speed (RPM)	Noise [dB(A)]
LWBE3G630-188PT-05	400	3600	4.4	19158	968	1250	/

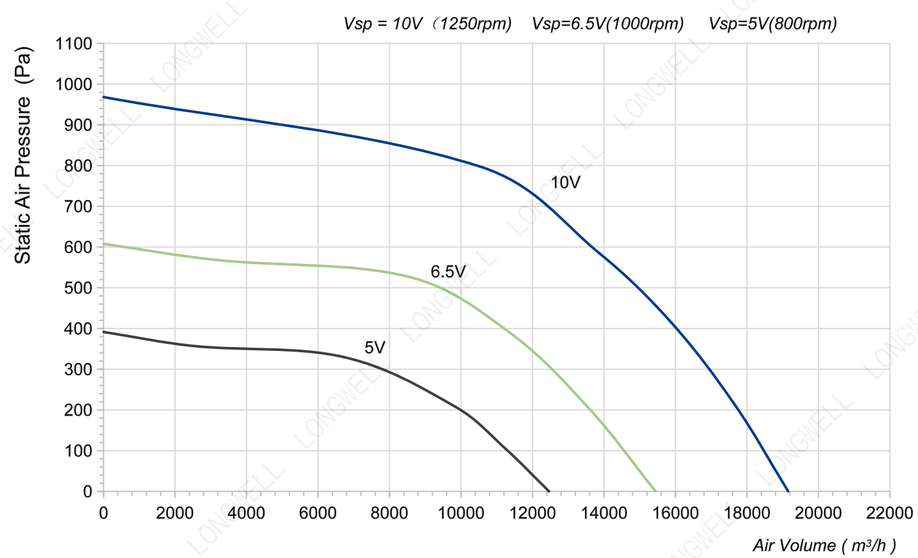

LWBE3G630-188NT-10 (without bracket)

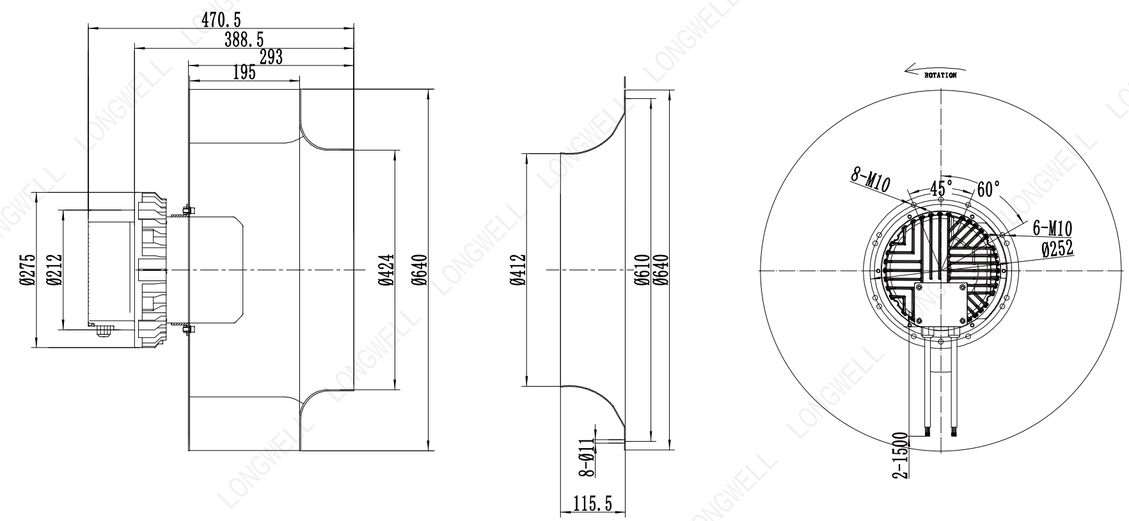

LWBE3G630-188PT-05 (with bracket)

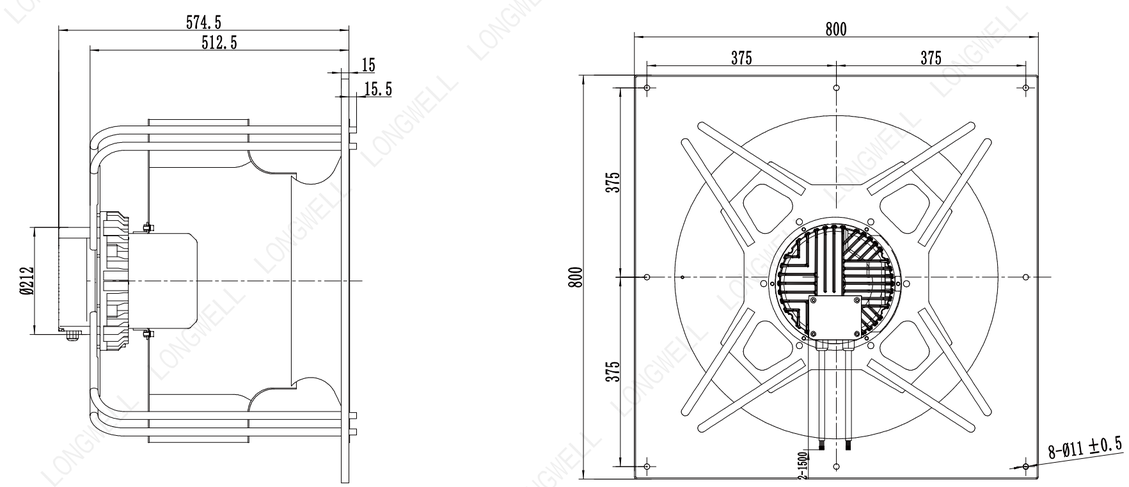

Ningbo Longwell Electric Technology CO, LTD
https://www.longwellfans.com Email:sales@zjlongwell.com

LWBE-630 Series

Product Characteristic

- Impeller Material: Aluminum Alloy
- Supply Voltage: 400V,50/60Hz
- Mode Of Operation: S1
- Protection Class: IP54
- Insulation Class: F
- Operation Temperature: -25℃～+60℃
- Techniacal Feature: Control input 0-10VDC/PWM,Tech output,Locked-Rotor protection,Reverse Polarity Over-voltage protection, Soft Start Protection.

Technical Specifications

Model	Voltage (V)	Input Power (W)	Current (A)	Air Volume (m³/h)	Static Pressure (Pa)	Speed (RPM)	Noise [dB(A)]
LWBE3G630-188PT-02	400	3850	8.4	21100	1071	1380	/

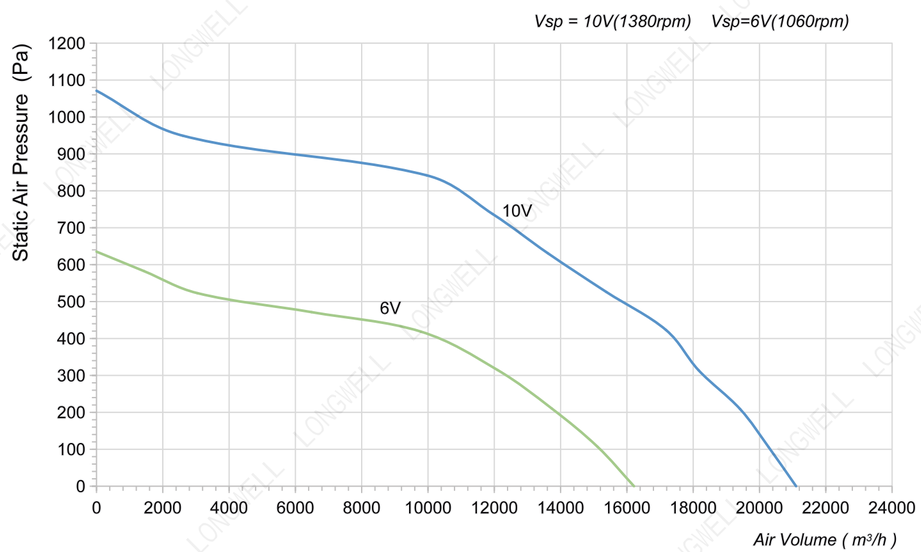

LWBE3G630-188NT-07 (without bracket)

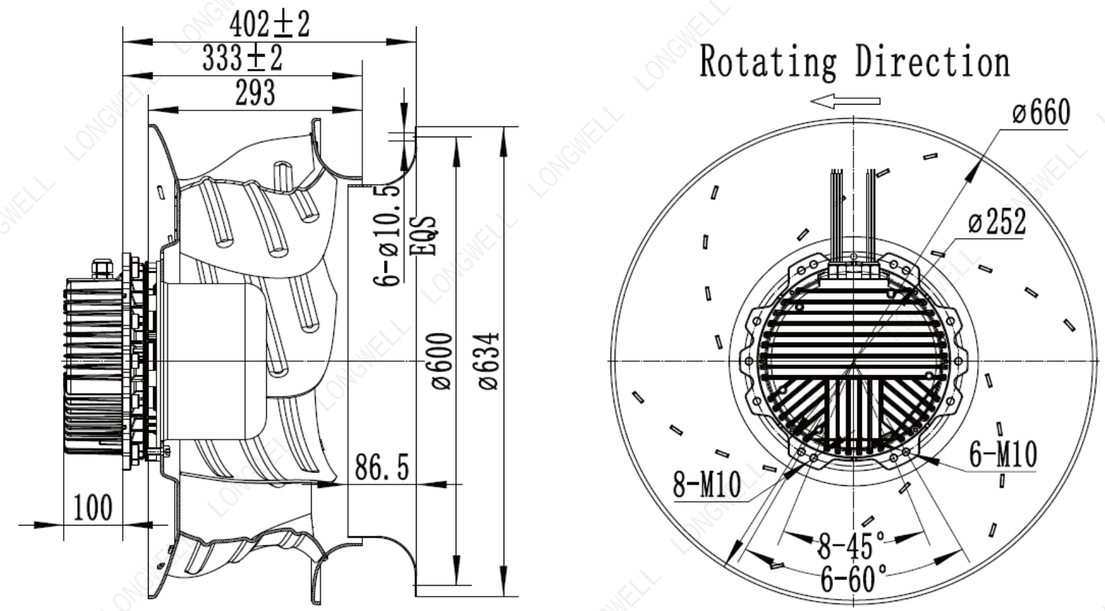

LWBE3G630-188PT-02 (with bracket)

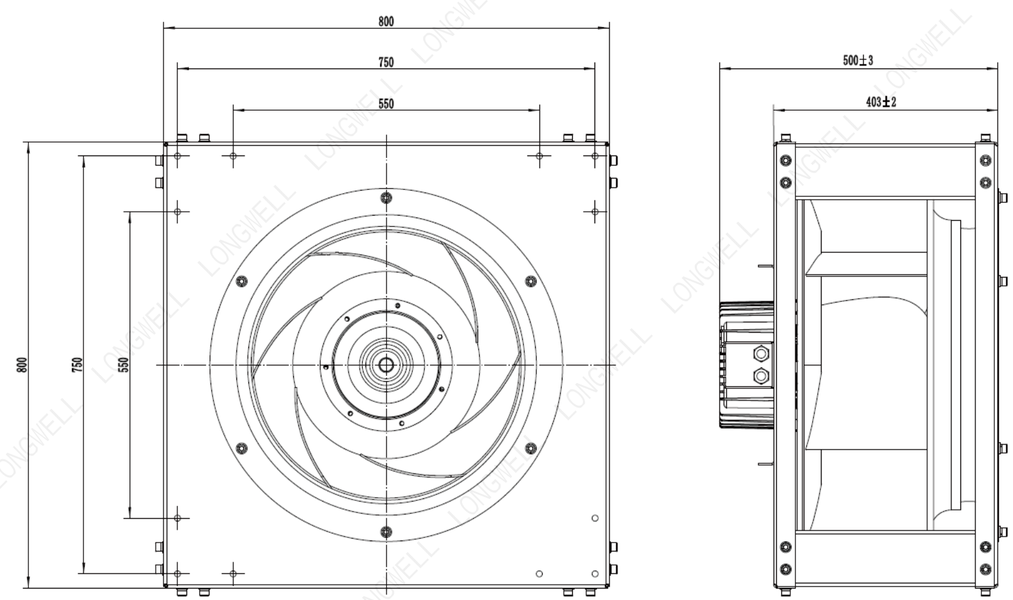

Ningbo Longwell Electric Technology CO, LTD
https://www.longwellfans.com Email:sales@zjlongwell.com

LWBE-630 Series

Product Characteristic

- Impeller Material: Aluminum Alloy
- Supply Voltage: 400V,50/60Hz
- Mode Of Operation: S1
- Protection Class: IP54
- Insulation Class: F
- Operation Temperature: -25℃～+60℃
- Techniacal Feature: Control input 0-10VDC/PWM,Tech output,Locked-Rotor protection,Reverse Polarity Over-voltage protection, Soft Start Protection.

Technical Specifications

Model	Voltage (V)	Input Power (W)	Current (A)	Air Volume (m³/h)	Static Pressure (Pa)	Speed (RPM)	Noise [dB(A)]
LWBE3G630-188PT-04	400	5570	10.8	21742	1677	1760	/

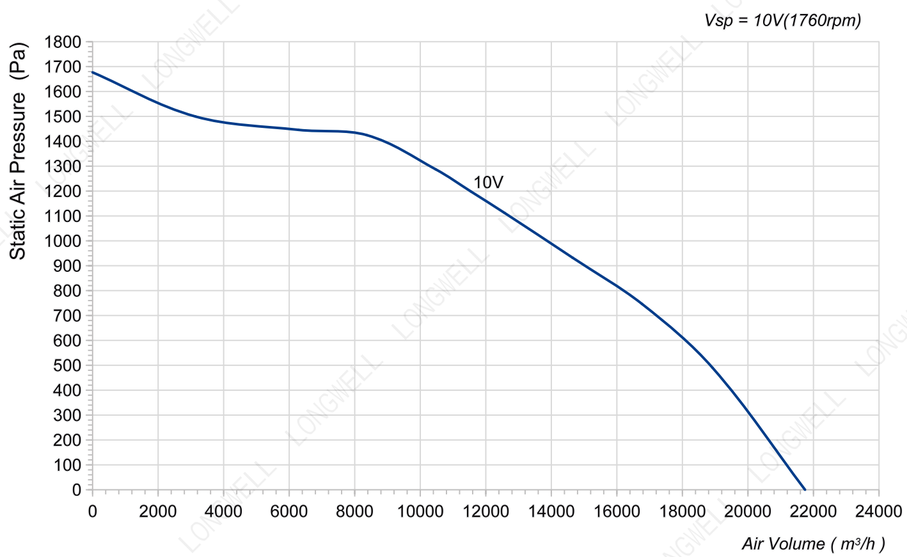

LWBE3G630-188NT-09 (without bracket)

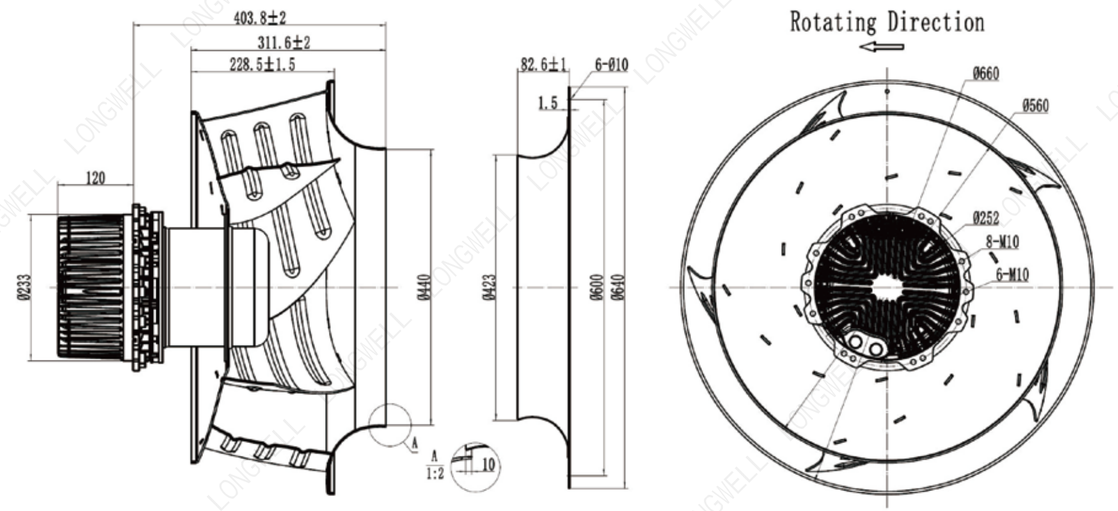
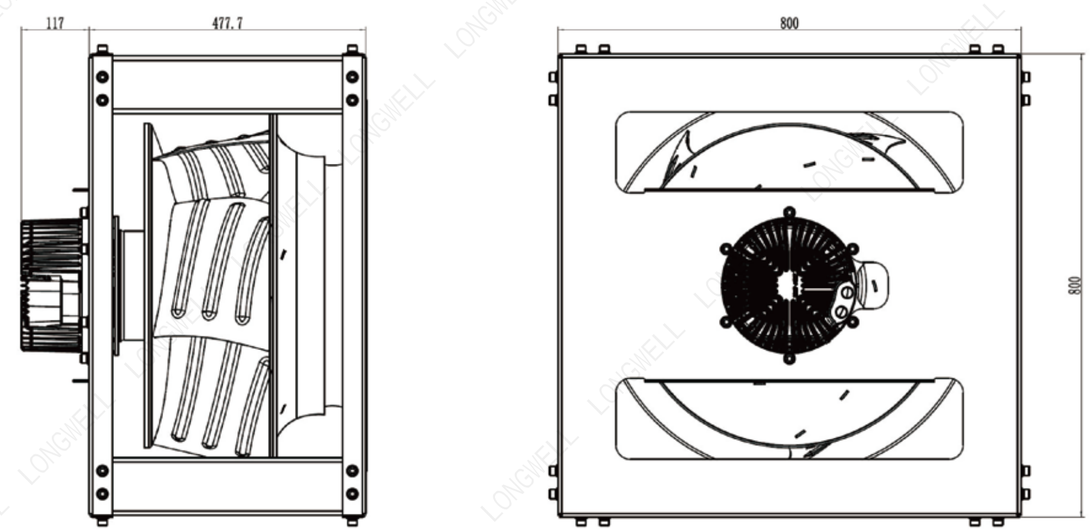
LWBE3G630-188PT-04 (with bracket)